A CONTAMINANT ICE VISUALIZATION EXPERIMENT IN A GLASS PULSE TUBE

J.L. Hall and R.G. Ross, Jr.
Jet Propulsion Laboratory
California Institute of Technology
Pasadena, CA 91109

A.K. Le
Dept. of Chemical Engineering
UCLA
Los Angeles, CA 90095

ABSTRACT

Results are presented from pulse tube experiments designed to investigate the effect of 400 parts per million water vapor contamination of the helium working gas. The experiments were conducted in a glass pulse tube to enable visualization of ice formation on internal surfaces. Photographs of this ice formation were taken along with simultaneous coldtip temperature and compressor power measurements. Four types of regenerator elements were tested in various combinations: 200- and 400-mesh stainless steel screens, 1.6 mm diameter glass beads, and 1.6 mm thick perforated plastic plates. Internal spacers were also used to provide clear fields of view into the regenerator stack. Substantial water-ice formation was observed at the cold end of the regenerator and on the inside wall of pulse tube; it appeared to be highly porous, like snow, and was seen to accumulate only in a very localized region at the coldest end, despite changing the cold tip temperature across a range of 150 to 235 K. Ice formation degraded pulse tube thermal performance only in cases where screen regenerators were used at the regenerator cold end. It was concluded that flow blockage was the mechanism by which contaminants affected performance; coarse regenerator elements were largely immune over the tested time scale of a few days. Substantially reduced ice formation and minimal performance loss were also observed in repeated tests where the contaminated gas was reused after warming up and melting of the accumulated internal ice. Significant adsorption of the liquid water onto the regenerator was inferred, a process that depleted the gas phase concentration of water.

INTRODUCTION

Gas phase contaminants inside pulse tube cryocoolers will freeze. If enough frozen material accumulates, there will be a loss of overall thermal performance due to one or more possible mechanisms such as flow blockage, internal geometry change, or increased parasitic heat conduction. The source of these contaminants can be either impurities in the helium charge gas, or outgassing of internal cooler surfaces and materials. Both sources are typically present in actual systems with the relative importance a function of gas purity, cleaning procedures, materials of construction, and seal performance.[1] A recent investigation[2] focused on the charge gas impurity aspect of the problem and found modest perfor-

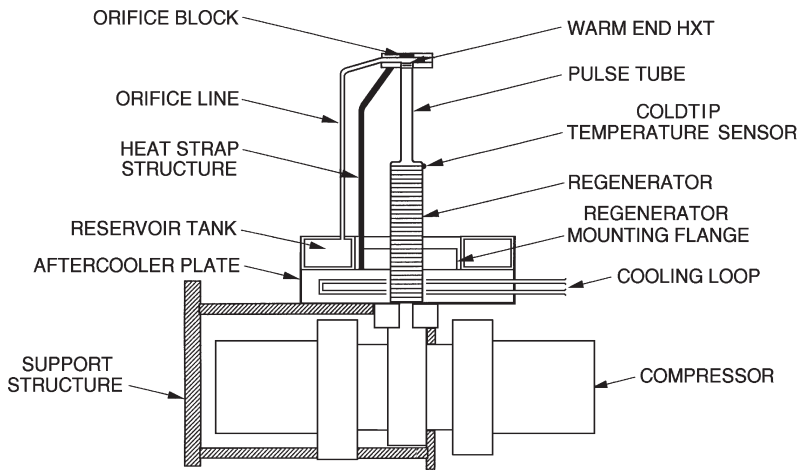

Figure 1. Schematic Diagram of Glass Pulse Tube.

mance losses due to water, carbon dioxide, argon and nitrogen contaminants at levels ranging from 10 to 100 ppm per component. The observed performance loss occurred over a time scale of approximately one week, a value that was estimated to be consistent with the gas diffusion time scale inside the pulse tube used for those experiments. Before and after measurements with a mass spectrometer did not reveal any appreciable accumulation of contaminants due to outgassing of internal surfaces over the one-week test period.

One of the limitations of the previous investigation was the lack of visual observations of contaminant ice formation inside the metal pulse tube. Thermal performance loss was determined from temperature and power consumption measurements, but it was not possible to deduce where the ice was forming or what specific physical mechanism was responsible for the performance loss. The present investigation was designed to address this problem by conducting experiments in a glass pulse tube that allowed direct observation of internal ice formation. The overriding intent was to enhance the visualization aspect of the experiment even at the cost of refrigeration performance. In practice, the use of a glass tube and the absence of multilayer insulation limited the coldtip temperatures to 150 K as opposed to the 60 K temperatures achieved in the earlier study.

EXPERIMENTAL APPARATUS

The experiments were performed with a simple orifice pulse tube mounted on a 5-cc Lockheed two-piston back-to-back linear compressor (Fig. 1). The pulse tube consisted of a quartz glass tube with stainless steel end connections. The glass to metal interfaces consisted of flared, grooved joints that were clamped together and sealed with rubber O-rings. The 1.6-mm wall thickness glass tube was comprised of two sections, a 19 mm O.D. lower part that housed the regenerator, and a 10 mm O.D. upper part that was the pulse tube itself. The two tubes were fused together with a smooth shoulder joint. An “L”-shaped copper busbar was used to thermally connect the orifice end of the pulse tube to the cooled reservoir plate. Indium shims placed between the copper bus bar and the pulse tube served the dual purposes of improving the junction heat transfer and increasing the pre-load on the stack to enhance the compression, and hence performance, of the O-rings.

The system was typically operated in the range of 36 to 40 Hz with no applied heat load. A fixed heat rejection temperature of 0°C was maintained by an external fluid-loop chiller attached to the pulse tube mounting plate. A gas pressure of 1.5 MPa (200 psig) was used in all tests. Two different gas compositions were employed: a “clean” gas comprised of five-nines pure helium, and a “contaminated” gas comprised of helium with 400 ppm of water vapor. The corresponding partial pressure of water at this concentration and pressure is 4 torr, which corresponds to a dew point of 275 K.[3]

Temperature data were provided by cryodiodes bonded onto the outside of the glass tube at three locations. The middle location, just below the shoulder joint, was defined to be the coldtip temperature for these experiments (see Fig. 1). Compressor input power was measured with a power analyzer and recorded by hand at irregular intervals.

Two different vacuum enclosures were used for these experiments. Initially, a small acrylic cylinder was bolted onto the pulse tube base plate and sealed with a Viton O-ring. This arrangement provided good optical access; however, outgassing of the acrylic limited the achievable vacuum levels to approximately 3×10^{-5} torr. This limitation became unacceptable once pulse tube coldtip temperatures of approximately 205 K or less were achieved because residual water vapor began to freeze on the outside of the pulse tube and obscured the internal view. The addition of a crude liquid nitrogen cryopump to the acrylic chamber succeeded in lowering the vacuum level to 1×10^{-6} torr, but this was still not sufficient to prevent external frost at the lowest coldtip temperatures. Therefore, some tests were conducted with the entire pulse tube placed in a 0.45 m diameter glass bell jar. A combination of a 1-stage Gifford-McMahon cryopump and mechanical roughing pumps succeeded in generating vacuum levels as low as 6×10^{-7} torr, sufficient to prevent all external icing. However, the glass bell jar was not constructed of optical quality glass and this degraded our ability to make high quality visual observations and photographs.

Visual inspections were enhanced by the use of a binocular microscope that provided an effective magnification of approximately 3x at standoff distances of up to 0.5 m. Photographs were taken with a hand-held 35 mm camera employing a 50 mm lens with extension tubes and using 200 ASA print film. Adequate depth of field was achieved by stopping the lens down to f/16 to f/22. One or two tungsten halogen lamps were used to provide camera illumination, with typical exposure times of 1/60 s or less.

Four different kinds of regenerator elements were tested in various combinations. These were: 1.6 mm glass beads; perforated 1.6 mm thick acrylic plates with typically 30% porosity and 1.6 mm holes; 200-mesh stainless steel screen; and 400-mesh stainless steel screen. The glass beads and perforated plates were primarily used to provide better visual access to the inside of the regenerator stack. Experiment duration with a particular regenerator and gas composition ranged from a few hours to a week. Every time the pulse tube was opened up to change the regenerator, the inside surface was cleaned with a propanol-soaked tissue. After reassembly, the pulse tube would be internally evacuated at room temperature with a turbopump for one to three days. Although the residual contamination was not measured, previous experience[2] suggests that a level of 20-30 ppm of water and nitrogen is achieved with this kind of cleaning.

RESULTS AND DISCUSSION

A total of 30 pulse tube tests was conducted in this study to explore contamination effects in the different regenerators across a coldtip temperature range of 150 K to 235 K. Several of these tests were done with clean helium gas to establish a baseline performance at various temperatures. All other experiments used 400 ppm water-contaminated helium gas. Over a hundred photographs were taken to document the extent of internal ice formation. Of these, four pairs of before-and-after photographs from four different experiments have been included to illustrate the key findings. Figure 2 shows a double-perforated-plate-over-glass-bead regenerator, both before and after one day of continuous operation at 235 K. Note the use of small glass columns to separate the plates and provide a clear view of the entire plate surface. Figure 3 shows the results, before and after two days of continuous operation, with a regenerator involving a perforated plate over a stack of 200-mesh stainless steel screens. Other configurations seen in later photographs included the use of an all-200-mesh stainless steel screen regenerator, and a regenerator with 50 layers of 400-mesh screens on top of a stack of 200-mesh screens.

A key result illustrated by the photographs is that every experiment with newly loaded 400 ppm water-contaminated helium gas produced enough internal frost to be visible to the

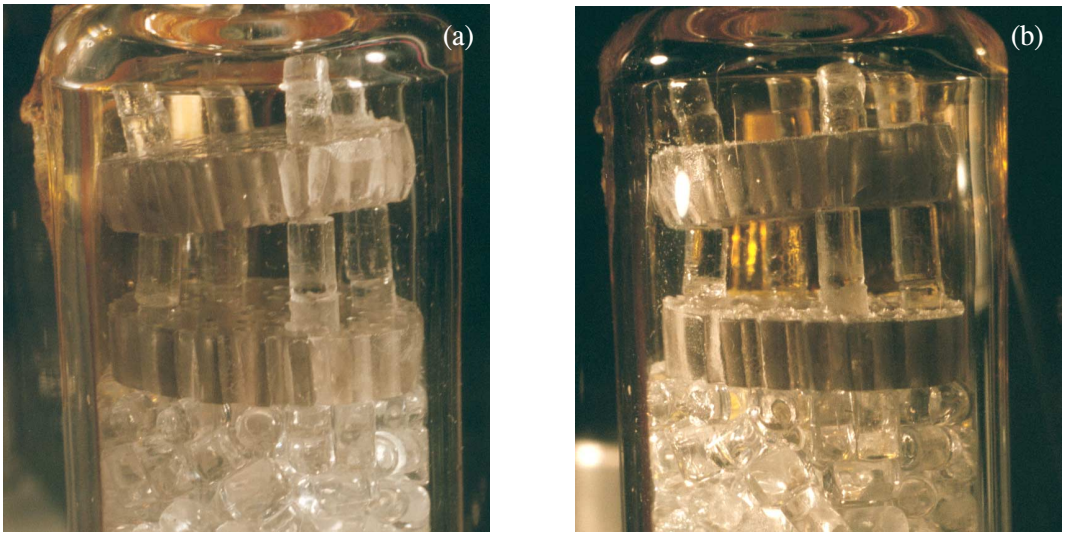

Figure 2. Double-plate-over-glass-bead regenerator, before and after icing (GPT 5).

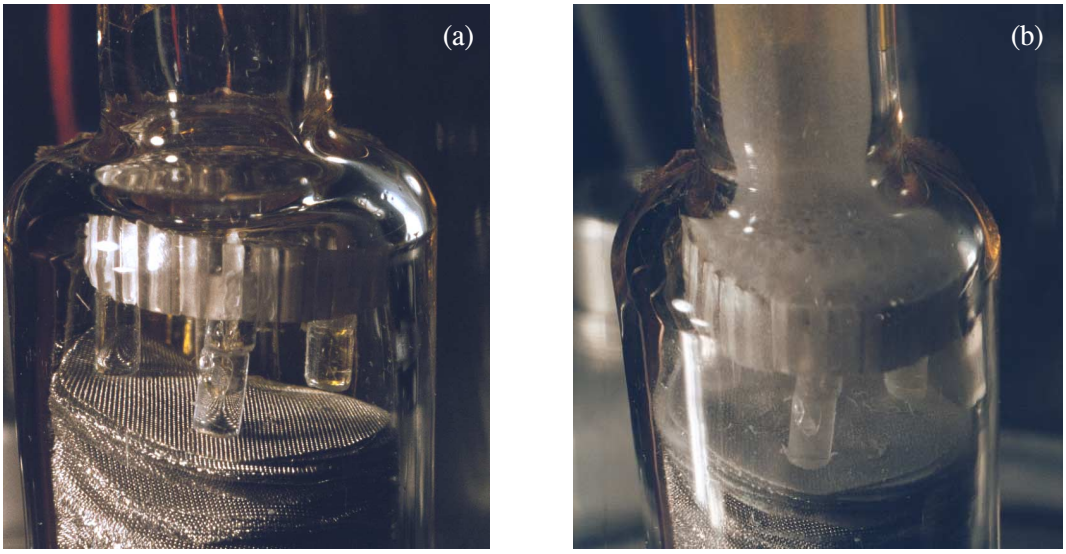

Figure 3. Photos of plate-over-200-mesh-screen regenerator, before and after icing (GPT 9).

naked eye. In general, this frost became visible on the inside wall of the small diameter pulse tube section within half an hour of start-up. Figures 4a, 5a, and 5b show this wall frost after it had accumulated for one or more days. It took longer (2+ hours) to see frost accumulating on regenerator surfaces, presumably because of the poorer visibility rather than because of smaller accumulation rates. Interestingly, the frost always accumulated on the top surface of regenerator elements, and only on those elements at the very top of the stack. For example, both plates in Fig. 2b show frost on the top surface, while oblique views from below (not shown) revealed no frost underneath. A few of the glass beads right below the second plate also showed frost deposits, but no frost is seen lower down the stack. A similar pattern is seen in Fig. 3, where only the plate and the top one or two layers of screen show frost accumulation. In Fig. 4a and 4b we see frost only on the top screen and not in the gap that was located ten screen layers below the top. No counter-examples were seen to this pattern of frost accumulation occurring only at the very top of the regenerator stack despite achieving coldtip temperatures as low as 150 K in some tests.

The frost that collects on the regenerator is highly porous like snow. This is seen in Fig. 5a in which there is literally a pile of tiny ice shards stacked in the center of the screen.

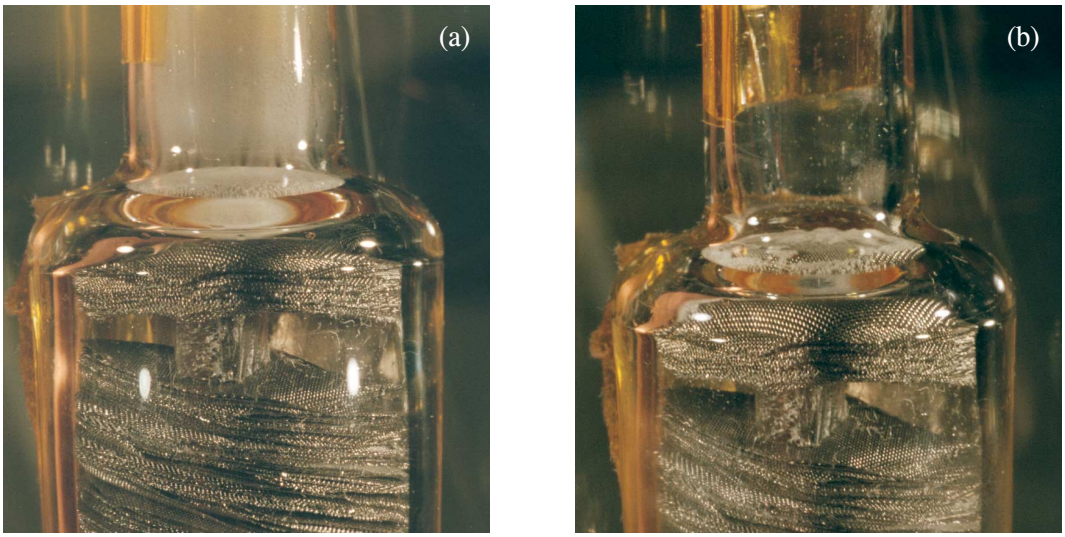

Figure 4. Photos of screen regenerator with spacer below shoulder joint, after one day and after six days of continuous operation (GPT 10).

These ice shards were only seen in this experiment and its repeat. In every other case, microscope observations indicated that the frost tended to build up as a large number of thin tendrils side by side, very much like the frost that forms on an exposed liquid nitrogen pipe in air. Over time these tendrils merged to form more uniform patches like in Figs. 3b and 4a. The ice shard pile in Fig. 5a also disappeared in time and became the more uniform coating seen in Fig. 5b. Despite the fact that this porous "snow" accumulated on only the top of exposed surfaces, it was never observed to fall downwards. As far as our observations could determine, the frost structures only grew by accretion of gas phase material.

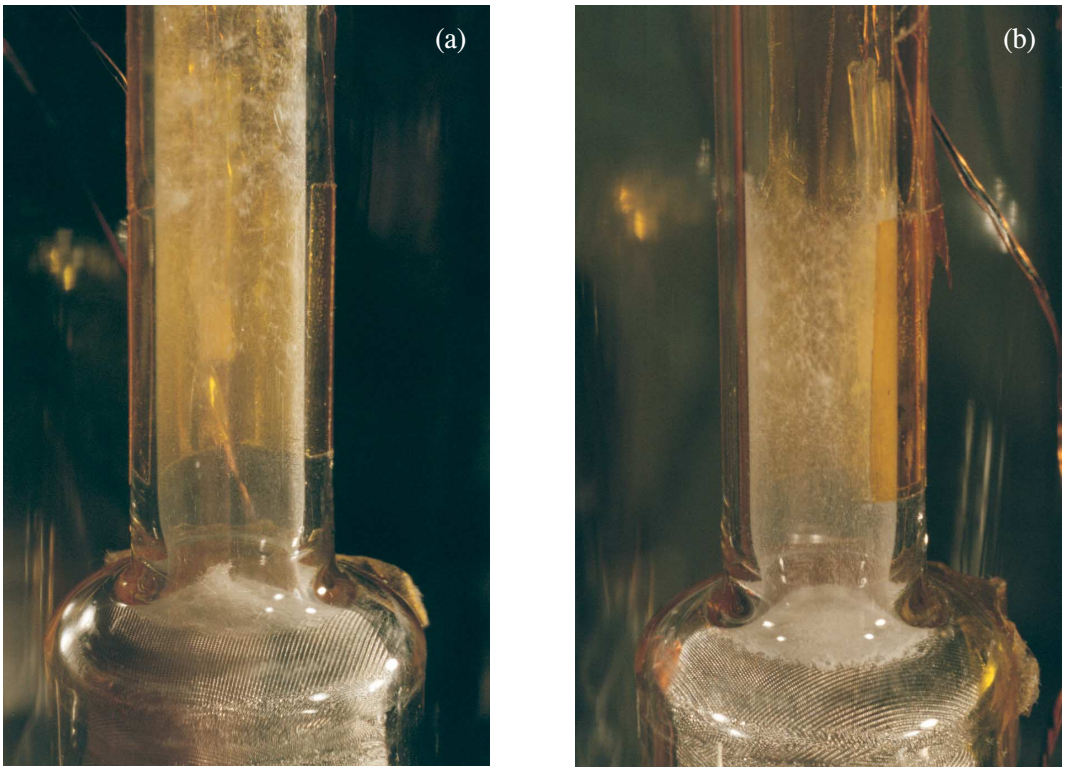

Figure 5. Photos of all-screen regenerator after one day and four days of operation (GPT 16).

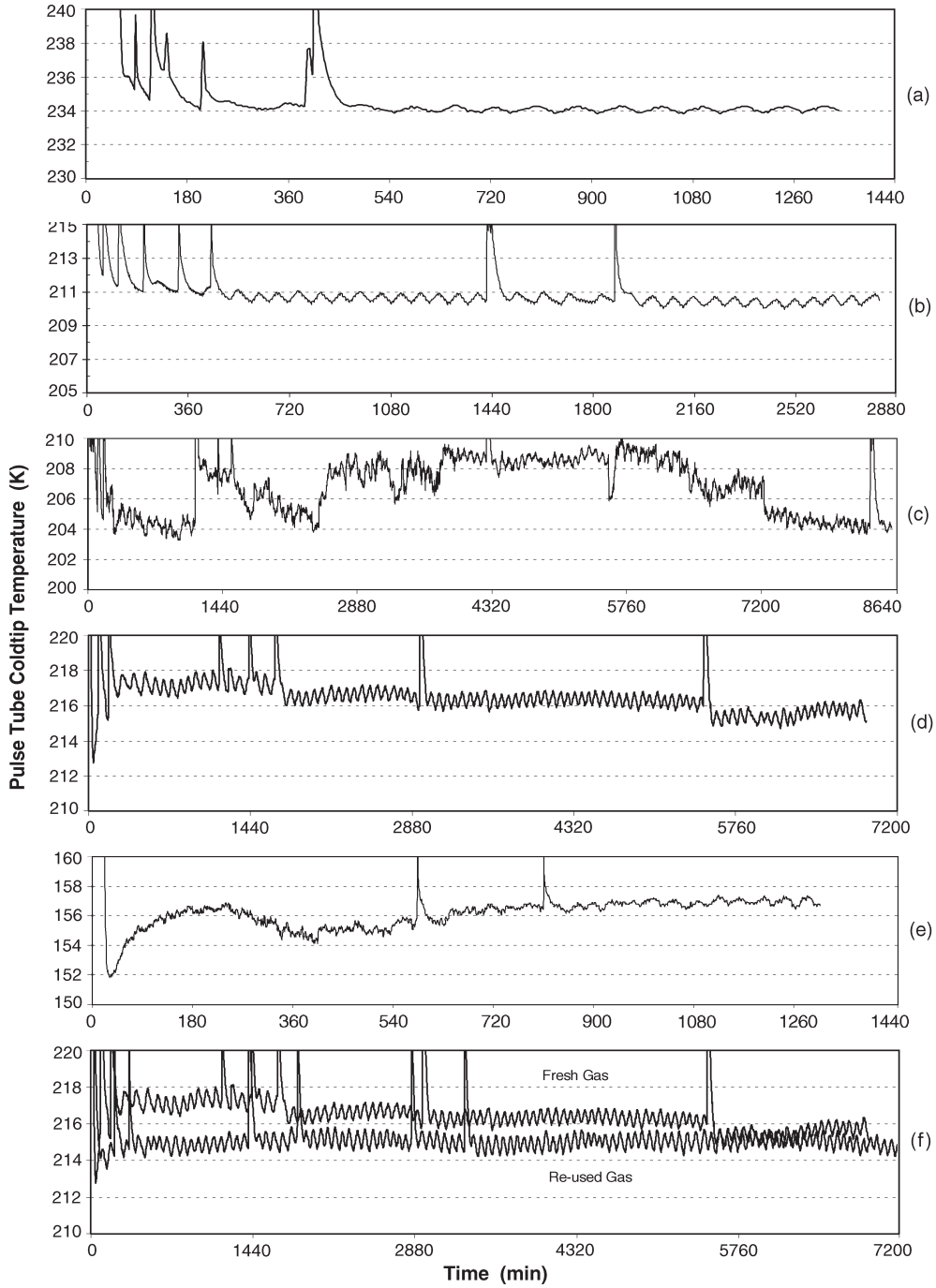

Figure 6. Coldtip temperature versus time traces for selected experiments.

Another result illustrated by the photographs is the tendency for internal frost to redistribute itself over time. For example, the wall frost in Fig. 4a has disappeared five days later in Fig. 4b. Also, the fairly uniform coating on the screen in Fig. 4a has developed some bare patches over the same time period. The disappearance of the ice shard pile from Fig. 5a to Fig. 5b is another example of this redistribution. However, it should be stressed that at lower temperatures, namely below 200 K, there generally seemed to be less redistribution of frost over the same few-day time scale.

Time traces of coldtip temperature from six different experiments are presented as Figs. 6a through 6f. The first four correspond in sequence to the tests whose photographs

are shown in Figs. 2 through 5. Figure 6e shows data from the lowest temperature experiment in this study, while Fig. 6f compares the data from 6d with a repeat experiment at the same test conditions. All of the plots show temperature spikes at irregular intervals. This is due to the high power camera lamps that were used to illuminate the pulse tube for photography and microscopy. The radiative heat transfer from these lamps was clearly large compared to the nominal parasitic heat load on the uninsulated glass pulse tube. Another feature seen in Figs. 6a, b, d and f is a regular temperature oscillation with an amplitude of 1 K or less. The cause of this oscillation is speculated to be temperature fluctuations in the ethylene glycol and water chiller unit that removes heat from the pulse tube.

All of these time traces come from experiments where the compressor piston stroke and heat rejection temperature set point were held constant. Therefore, any change in the mean coldtip temperature can be attributed to internal contamination effects. The data indicate quite strongly that internal frost formation did not necessarily correspond with thermal performance loss. For example, the mean temperature in Figs. 6a and 6b is constant with time despite the large accumulations of frost as seen in the corresponding photographs in Figs. 2 and 3. This constancy was mirrored by compressor power measurements taken at the same time. Conversely, the mean temperature in Figs. 6c and 6d is not constant with time. In Fig. 6c, the mean temperature rises approximately 5 K by mid-experiment, only to decay back to the original value by the sixth day. A similar pattern is seen in Fig. 6d in which there is an initial temperature rise from 213 K to 217 within the first few hours, then a slow decay down to 215 K by the end of the experiment. These temperature movements generally coincided with the internal frost redistributions illustrated in the photographs, namely the formation of a bare spot on the screen in Fig. 4b and the disappearance of the ice shard pile in Fig. 5a. Experiments at lower temperatures, which featured much less internal frost redistribution, showed correspondingly less temperature recovery. For example, a 155 K all-screen regenerator result is shown in Fig. 6e. After a partial temperature recovery at the half-day mark, the temperature climbed back again to a value roughly 5 K higher than the start value.

Evaluation of all the temperature and frost data revealed that coldtip temperatures changed only in experiments using screen regenerators that were pushed up against the shoulder joint at the pulse tube/regenerator tube junction. All tests with spacers or plates at the shoulder joint showed no change of temperature with time. The conclusion we draw from this is that the mechanism by which frost degrades the overall thermal performance is flow blockage, and that only small pore regenerator elements (like screens) that have excellent circumferential contact are susceptible to this blockage. Large pore elements, like perforated plates or beads, and elements that do not form very small gaps at the glass wall junction were not sufficiently blocked by internal frost formation. The corollary to this conclusion is that poor contact at the outer edge of screens or other small pore elements will allow enough flow at the wall to mitigate the blockage of the pores themselves. This suggests that the use of small spacers at the top of any pulse tube regenerator can alleviate much of the blockage effect by allowing for the flow to slide around the circumference and away from the frosted center.

A handful of tests were conducted in which pairs of experiments were performed under identical conditions with the same 400 ppm water contaminated helium gas. The gas was allowed to heat back up to room temperature between tests, but was not replaced or otherwise processed. During the warming process, it was generally observed that all of the accumulated ice inside the pulse tube melted in the range of 275 to 280 K, forming visible water drops that typically evaporated over the course of a few hours. The striking results from the repeat experiments were significantly less frost formation and negligible coldtip temperature change. Fig. 6f shows time traces from one such repeated experiment in which it appears that the first experiment used contaminated gas and the second used clean gas, even though the gas was not replaced between experiments. We speculate that the water drops that form during the warm-up phase between experiments wet the surface of the regenerator screens to such an extent that a significant amount became physically adsorbed,

thereby depleting the gas phase concentration of water. In addition, the time scale for desorption of this water must have been longer than the few day duration of the subsequent experiment in order for it not to reappear as visible frost. The large surface area of a screen regenerator coupled with a vast number of small crevices formed by wire to wire contact would seem to promote both physical adsorption and capillary condensation mechanisms; however, no detailed analysis has yet been performed to evaluate the plausibility of this adsorption theory for the apparent disappearance of gas phase water between experiments.

This dramatic effect of water adsorption onto regenerator screens suggested the possibility of adding specific adsorption elements to the regenerator to enhance the process. Two kinds of adsorbents were tested: a zeolite (molecular sieve) in 1.6 mm diameter bead form, and saran carbon in large pellet form. The zeolite was located near the high temperature end of the regenerator, while the saran carbon was placed near the cold end. In neither case, however, was frost reduction observed using fresh gas. Time traces of coldtip temperature likewise revealed no change due to blockage. One experiment was performed with a second saran carbon pellet placed at the top of the pulse tube on the possibility that significant water was reaching the coldtip from the downstream reservoir; however, this change also had no effect on the observed frost formation. A repeat experiment with the same gas after warm-up showed the same behavior as regenerators without saran carbon, namely apparent depletion of gas phase water and much reduced frost formation. The reasons for the zeolite and saran carbon null result are not yet clear. Two possibilities have been suggested: insufficient surface area of the zeolite and saran carbon to adsorb water at the necessary rate, and a limited vacuum bakeout temperature of only 100°C with this apparatus.

CONCLUSIONS

Glass pulse tube experiments were conducted with four different kinds of regenerator elements. Substantial internal ice formation was observed when 400 ppm water contaminated helium gas was tested across a coldtip temperature range of 150 to 235 K. The ice formation was limited to a highly localized region at the coldest end of the regenerator in all tests. The ice appeared to be highly porous like snow and was observed to redistribute itself over time, especially in the tests above 205 K. Internal ice formation only degraded pulse tube thermal performance in tests using screen elements at the regenerator cold end with good tube wall contact. Experiments with coarse regenerator elements or spacers at the end of the regenerator seemed immune to the blockage-induced performance degradation. Experiments in which water contaminated gas was reused after warm-up and melting of accumulated ice showed significantly reduced ice formation and negligible performance loss. It was concluded that perhaps chemical adsorption had occurred of the liquid water onto the regenerator surfaces, thus depleting the gas phase concentration of water.

ACKNOWLEDGMENTS

The work described in this paper was carried out at the Jet Propulsion Laboratory, California Institute of Technology and was jointly sponsored by the Caltech President's Fund and the NASA EOS IMAS TechDemo Project through an agreement with the National Aeronautics and Space Administration. The authors would like to acknowledge the laboratory assistance of Scott Leland at JPL.

REFERENCES

1. Getmanets, V.F. and Zhun, G.G., "Cryocooler Working Medium Influence on Outgassing Rate," *Cryocoolers 10*, Plenum Press, New York, 1999, pp. 733-742.

2. Hall, J. L. and Ross, R. G. Jr. "Gas Contamination Effects on Pulse Tube Performance," *Cryocoolers 10*, Plenum Press, New York, 1999, pp. 343-350.

3. O'Hanlon, J.F., *A User's Guide to Vacuum Technology*, John Wiley & Sons, NY, 1980, p. 364.