425
2-3-80
JRC

#2

Dr. 2163

DOE/JPL/955614-80/1

OPERATION AND MAINTENANCE COST DATA FOR RESIDENTIAL PHOTOVOLTAIC MODULES/PANELS

MASTER

Final Report, Low-Cost Solar Array Project, Engineering Area

DIST 349
NTIS-25

July 1980

Work Performed Under Contract No. NAS-7-100-955614

Burt Hill Kosar Rittelmann Associates
Research and Solar Applications Division
Butler, Pennsylvania

63B

U.S. Department of Energy

R361

Solar Energy

DISTRIBUTION OF THIS DOCUMENT IS UNLIMITED

DISCLAIMER

This report was prepared as an account of work sponsored by an agency of the United States Government. Neither the United States Government nor any agency Thereof, nor any of their employees, makes any warranty, express or implied, or assumes any legal liability or responsibility for the accuracy, completeness, or usefulness of any information, apparatus, product, or process disclosed, or represents that its use would not infringe privately owned rights. Reference herein to any specific commercial product, process, or service by trade name, trademark, manufacturer, or otherwise does not necessarily constitute or imply its endorsement, recommendation, or favoring by the United States Government or any agency thereof. The views and opinions of authors expressed herein do not necessarily state or reflect those of the United States Government or any agency thereof.

DISCLAIMER

Portions of this document may be illegible in electronic image products. Images are produced from the best available original document.

DISCLAIMER

"This book was prepared as an account of work sponsored by an agency of the United States Government. Neither the United States Government nor any agency thereof, nor any of their employees, makes any warranty, express or implied, or assumes any legal liability or responsibility for the accuracy, completeness, or usefulness of any information, apparatus, product, or process disclosed, or represents that its use would not infringe privately owned rights. Reference herein to any specific commercial product, process, or service by trade name, trademark, manufacturer, or otherwise, does not necessarily constitute or imply its endorsement, recommendation, or favoring by the United States Government or any agency thereof. The views and opinions of authors expressed herein do not necessarily state or reflect those of the United States Government or any agency thereof."

This report has been reproduced directly from the best available copy.

Available from the National Technical Information Service, U. S. Department of Commerce, Springfield, Virginia 22161.

Price: Paper Copy $9.00
Microfiche $3.50

DOE/JPL/955614-80/1
Distribution Category UC-63b

OPERATION AND MAINTENANCE

COST DATA FOR RESIDENTIAL PHOTOVOLTAIC MODULES/PANELS

JPL CONTRACT NO. 955614

LOW-COST SOLAR ARRAY PROJECT
ENGINEERING AREA

FINAL REPORT

July 1980

The JPL Low-Cost Solar Array Project is sponsored by the U.S. Department of Energy and forms part of the Solar Photovoltaic Conversion Program to initiate a major effort toward the development of low-cost solar arrays. This work was performed for the Jet Propulsion Laboratory, California Institute of Technology by agreement between NASA and DOE.

Prepared for

Jet Propulsion Laboratory
Pasadena, California 91103

by

BURT HILL KOSAR RITTELMANN ASSOCIATES
400 Morgan Center
Butler, Pennsylvania 16001

DISTRIBUTION OF THIS DOCUMENT IS UNLIMITED

STAFF

The following persons at Burt Hill Kosar Rittelmann Associates were responsible for the production of this Document:

J. R. Oster, Jr.	Project Manager
D. R. Zaremski, Jr.	Principle Investigator
E. M. Albert	Report Production
S. L. Hawkins	Report Production

ACKNOWLEDGEMENTS

Russell Sugimura of the Jet Propulsion Laboratory was the Technical Monitor for this study and Ronald C. Ross, Jr., is the Task Manager of the Engineering area of the Low-Cost Solar Array (LSA) Project for which this study was performed.

ABSTRACT

Burt Hill Kosar Rittelmann Associates has conducted a study to identify and estimate costs associated with the operation and maintenance of residential photovoltaic modules and arrays.

Six basic topics related to operation and maintenance to photovoltaic arrays were investigated - General (Normal) Maintenance, Cleaning, Panel Replacement, Gasket Repair/Replacement, Wiring Repair/Replacement, and Termination Repair/Replacement. The effects of the mounting types - Rack Mount, Stand-Off Mount, Direct Mount, and Integral Mount - and the installation/replacement type - Sequential, Partial Interruption, and Independent - have been identified and described. Recommendation on methods of reducing maintenance costs have been made.

CONTENTS

SECTION		PAGE
1	SUMMARY	1-1
2	INTRODUCTION	2-1
	2.1 TERMINOLOGY AND DEFINITIONS	2-2
	2.2 COST BASIS	2-5
	2.3 UNITS	2-6
3	CHARACTERISTICS OF MAINTENANCE	3-1
	3.1 CHARACTERISTICS OF RESIDENTIAL MAINTENANCE	3-3
	3.2 CHARACTERISTICS OF RESIDENTIAL MAINTENANCE RELATIVE TO PHOTOVOLTAICS	3-5
4	PANEL/ARRAY DESIGN	4-1
	4.1 PANEL/ARRAY MOUNTING TYPE	4-1
	4.2 INSTALLATION/REPLACEMENT TYPE	4-6
	4.3 PANEL/ARRAY DETAILS	4-8
5	OPERATION/MAINTENANCE	5-1
	5.1 GENERAL (NORMAL) MAINTENANCE	5-2
	5.2 CLEANING	5-9
	5.3 PANEL REPLACEMENT	5-15
	5.4 GASKET REPAIR/REPLACEMENT	5-32
	5.5 WIRING REPAIR	5-36
	5.6 TERMINATION REPAIR	5-40
6	REPAIR/REPLACEMENT STRATEGY	6-1
7	CONCLUSIONS	7-1
8	RECOMMENDATIONS	8-1
9	NEW TECHNOLOGIES	9-1
10	BIBLIOGRAPHY	10-1

SECTION I

SUMMARY

This report presents the results of a study conducted by Burt Hill Kosar Rittelmann Associates. The objective of this study was to identify and estimate costs associated with the operation and maintenance of residential photovoltaic modules and arrays. The approach used in accomplishing this objective was to identify the potential problems associated with photovoltaic modules and arrays; identify and describe the corrective procedures related to these problems; identify and estimate costs to perform the corrective procedures; to identify the cost drivers relative to the specified O&M procedures; and to recommend, where possible, potential techniques and procedures for the reduction of operation and maintenance procedures.

The costs associated with maintenance procedures will vary greatly, with strong dependencies on:

- The characteristics of maintenance in general
- Panel/array mounting type
- Installation/replacement type
- Panel/array detail

In the residential sector, the owner is the principal charged with the responsibility of maintenance. Specific maintenance procedures can be carried out by the owner or an individual, contracted by the owner, who specializes in a maintenance task. Typically, the homeowner performs only the simplest of maintenance tasks and seeks the expertise of a more qualified individual to perform the more detailed and technical tasks.

As a result, most maintenance procedures relative to photovoltaic arrays will be carried out by professionals. This will of course result in higher operation and maintenance costs.

The four basic generic mounting types, as identified in the "Residential Photovoltaic Module and Array Requirement Study", Report No. DOE/JPL 955149 - 79/1, are described and their affect on maintenance procedures and costs are characterized. These mounting types are:

- Rack Mount
- Standoff Mount
- Direct Mount
- Integral Mount

Each of these mounting types impose certain restrictions relative to maintenance operations. For example, the following installation/ replacement types have been identified and investigated:

- Sequential
- Partial Interruption
- Independent

The photovoltaic systems designer must perform a detailed optimization relative to initial costs, operation and maintenance costs and the expected life of the system. This optimization must be performed while keeping in mind the strong influence aesthetic considerations dictate in residential design.

Six basic topics pertaining to the operation and maintenance of photovoltaic arrays were investigated in this study. These tasks include:

- General (normal) maintenance
- Cleaning
- Panel replacement
- Gasket repair/replacement
- Wiring repair/replacement
- Termination repair/replacement

It is important to note that the costs generated in this study are detail and site specific, and care must be used when attempting to determine the applicability of these numbers relative to a manufacturer's specific panel detail.

As residential homeowners are not likely to be involved in typical maintenance operations, the array must be designed to minimize owner involvement. Likewise, it is necessary that the photovoltaic array be designed to minimize all maintenance operations in order to keep the life cycle cost to a minimum.

Of the above mentioned maintenance procedures cleaning is likely to be performed on a fairly regular basis. However, it appears that professional cleaning should not be performed more than once a year unless the array degradation is severe as a result of dirt retention. The only other maintenance category which is likely to add significantly to the operation

and maintenance costs during the life of the array is panel replacement. This cost is very sensitive to panel edge and mounting details and extreme efforts must be taken to minimize the costs associated with replacement if the modules are prone to permanent damage.

Finally, all components of the photovoltaic module and array must be designed to be maintenance-free and have a design life of 20 years. To accomplish this care must be taken in the choice of materials, and a design optimization must include a detailed evaluation of the need for and the associated costs of maintenance.

SECTION 2

INTRODUCTION

This final report documents a study of operation and maintenance procedures and associated costs for photovoltaic modules, panels and arrays used in residential applications. The study was performed by Burt Hill Kosar Rittelmann Associates for the engineering area of the Jet Propulsion Laboratories Low-Cost Solar Array Project under contract No. 955614 as a part of the U.S. Department of Energy Solar Photovoltaic Conversion Program.

The primary emphasis of the study was on costs associated with the maintenance of the photovoltaic module, panel and array in residential applications. The types of maintenance required includes such items as panel replacement, wire replacement, cleaning and general/routine servicing. The maintenance procedures which will be performed are a direct result of the type of problem and the restrictions imposed by the nature of the application, i.e., the general lack of residential owners' involvement in the maintenance and repair of his house and its systems.

The direct objectives of this study were:

- Identify potential operation problems which may surface during the life of the photovoltaic array.

- Identify proper maintenance procedures for the previously identified operation problems.

- Establish maintenance procedure costs.

- Identify major cost drivers and methods for reduction of costs associated with maintenance procedures.

The approach used in accomplishing these objectives was to first identify the potential problems that may be encountered during the operational life of the PV array; to investigate the nature of the residential owners's participation in the general maintenance of his home; to establish typical maintenance procedures which can be used to solve the typical problems which have been previously identified; and finally to determine the costs associated with these maintenance procedures. In order to complete the study the major cost drivers corresponding to the maintenance procedures were identified and where possible methods of reducing these costs have been recommended. The results of that effort are presented in this final report.

2.1 TERMINOLOGY AND DEFINITIONS

Terminology used in the final report are illustrated in Figure 1. These come from the preliminary set of photovoltaic terminology and definitions established in 1978 by members of the Photovoltaics Program. The term "Residential Photovoltaic Power System" was not in the original definition, but is provided for completeness.

Also, the following definitions are included for use in this report:

Durability or Useful Life. Durability is the average expected service life of components with a specified maintenance program taking into account the cost of maintaining the component at an acceptable performance level and the cost of replacing the component. At the point in time where the cost of the maintenance program exceeds the cost of replacement, the service life of that component has been exceeded. Reliability is the probability that a component will perform under stated conditions its' intended function for a specified period of time.

SOLAR CELL--THE BASIC PHOTOVOLTAIC DEVICE WHICH GENERATES ELECTRICITY WHEN EXPOSED TO SUNLIGHT

MODULE--THE SMALLEST COMPLETE, ENVIRONMENTALLY PROTECTED ASSEMBLY OF SOLAR CELLS AND OTHER COMPONENTS (INCLUDING ELECTRICAL TERMINATIONS) DESIGNED TO GENERATE DC POWER WHEN UNDER UNCONCENTRATED TERRESTRIAL SUNLIGHT

PANEL--A COLLECTION OF ONE OR MORE MODULES FASTENED TOGETHER, FACTORY PREASSEMBLED AND WIRED, FORMING A FIELD INSTALLABLE UNIT

ARRAY--A MECHANICALLY INTEGRATED ASSEMBLY OF MODULES TOGETHER WITH SUPPORT STRUCTURE AND OTHER COMPONENTS, AS REQUIRED, TO FORM A FIELD INSTALLED DC POWER PRODUCING UNIT

BRANCH CIRCUIT--A NUMBER OF MODULES OR PARALLELED MODULES CONNECTED IN SERIES TO PROVIDE DC POWER AT THE SYSTEM VOLTAGE LEVEL

RESIDENTIAL PHOTOVOLTAIC POWER SYSTEM--THE AGGREGATE OF ALL BRANCH CIRCUITS (ARRAY(S)) TOGETHER WITH AUXILIARY SYSTEMS (POWER CONDITIONING, WIRING, PROTECTION, CONTROL, UTILITY INTERFACE) AND FACILITIES REQUIRED TO CONVERT TERRESTRIAL SUNLIGHT INTO ELECTRICAL ENERGY SUITABLE FOR CONNECTION TO A RESIDENCE'S ELECTRICAL DISTRIBUTION SYSTEM OR A UTILITY ELECTRIC POWER GRID

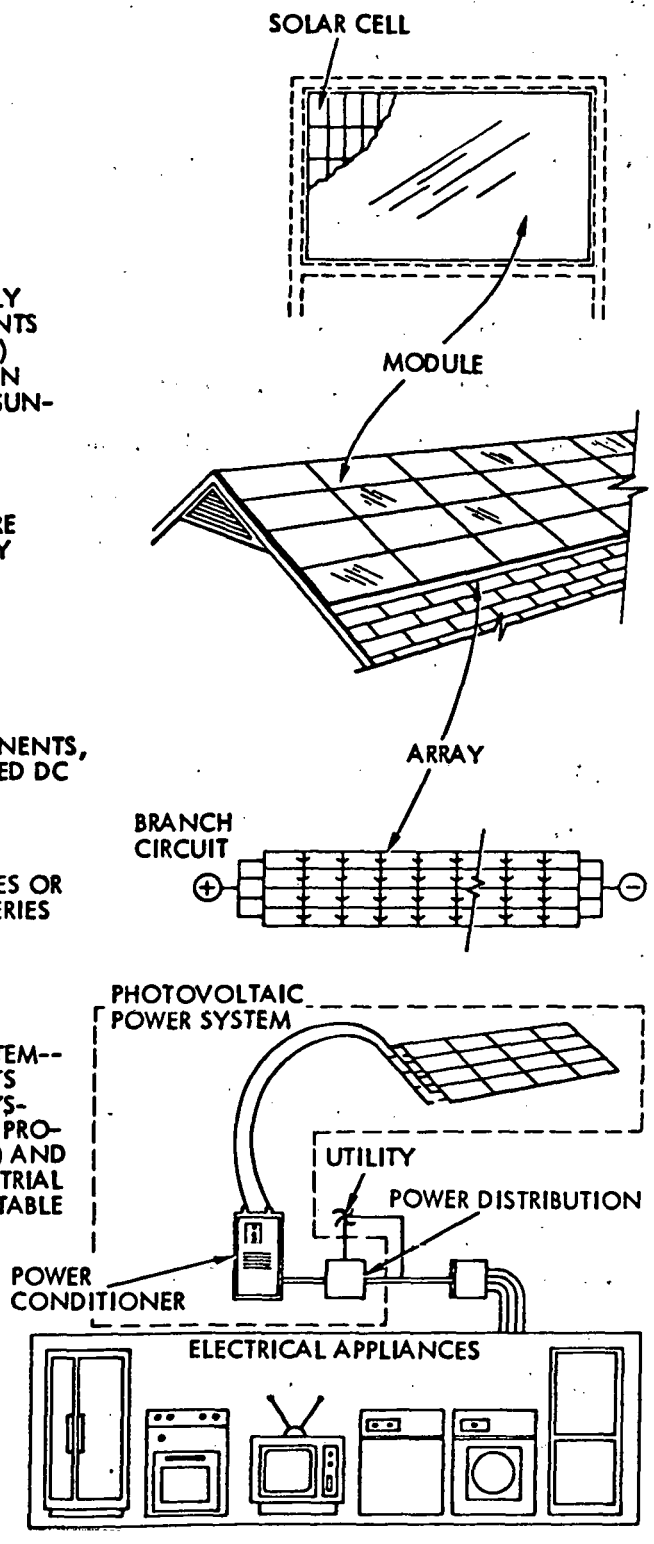

Figure 2.1 Residential Photovoltaic System Terminology

Serviceability. Serviceability is a measure of the degree to which servicing the component can be accomplished under specified conditions within a given amount of time. Servicing is the performance of operations intended to sustain the intended operation of the component; this includes such items as painting and inspecting for mechanical and electrical integrity, but does not include periodic replacement of parts or any corrective maintenance tasks.

Maintainability. Maintainability is a design and installation characteristic indicating the degree of ease with which a component can be restored to its proper operation condition. Maintainability is generally stated as the quantity of time required to restore or repair failures.

Periodic Maintenance. Periodic maintenance is the action of performing normal maintenance procedures on a systematic basis by scheduling service and replacement of components in order to maintain performance or prevent failure.

Preventive Maintenance. Preventive maintenance programs are planned procedures designed to retain a price of equipment or a component at a specified level of performance.

Corrective Maintenance. Corrective maintenance is an action taken as a result of failure in order to return an item to a specified level of performance.

Accessibility. Accessibility is the quality or state of being easy to access.

Repairability. Repairability is the quality or state of being easy to repair.

Cleanability. Cleanability is the quality or state of being easy to clean.

2.2 COST BASIS

Costs presented in the final report are expressed in 1980 constant dollars unless stated otherwise. Costs were developed in first quarter 1979 dollars and converted to constant 1980 dollars by use of a price inflater, 1.17.

Two major sources of costing information were used:

1. Engelsman, Coert, "1979 Residential Cost Manual", Van Nostrand Reinholt Company, New York, New York, 1979.

2. 1979 Means Cost Data File, Robert Snow Means Company Inc., Duxbury, Massachusetts, 1979.

The labor costs used throughout this report represent averaged values obtained by investigating the costs throughout the country of specific labor group specialists. These numbers are inclusive of general and administrative, and overhead costs, but do not reflect profit. Table 1, an index to geographical area conversion tables for quoted labor costs, can be used to more accurately reflect the maintenance costs for specific locations throughout the country.

2.3 UNITS

Despite attempts to change it, the residential construction industry remains rooted in the English system of units. It is not anticipated that the conversion of the industry to SI units will be easy or painless. Rather than indiscriminantly convert all measurements to SI units, it was decided to leave the English units as best representative of the industry today.

ROOFING and SIDING Water and Dampproofing, etc.		LABOR URBAN AREA	LABOR RURAL AREA
ALABAMA	Birmingham	.66	.63
	Mobile	.70	.68
	Montgomery	.66	.64
ALASKA	Anchorage	1.40	1.33
	Fairbanks	1.40	1.33
ARIZONA	Phoenix	.79	.75
	Tucson	.82	.79
ARKANSAS	Fort Smith	.68	.66
	Little Rock	.68	.65
CALIFORNIA	Fresno	.97	.94
	Los Angeles	1.04	.99
	Oakland	1.06	1.01
	Sacramento	1.04	1.00
	San Diego	1.06	1.02
	San Francisco	1.06	1.01
COLORADO	Colorado Springs	.75	.71
	Denver	.80	.76
CONNECTICUT	Bridgeport	.85	.82
	Hartford	.85	.81
	New Haven	.85	.82
DELAWARE	Dover	.68	.66
	Wilmington	1.01	.96
D.C.	Washington	.79	.74
FLORIDA	Fort Lauderdale	.77	.73
	Jacksonville	.70	.67
	Miami	1.10	1.05
	Pensacola	.70	.67
	Tallahassee	.70	.68
	Tampa	.72	.68
	West Palm Beach	.77	.74
GEORGIA	Atlanta	.59	.56
	Savannah	.48	.46
HAWAII	Hilo	.97	.94
	Honolulu	.97	.92
IDAHO	Boise	.68	.65
	Pocatello	.70	.68
ILLINOIS	Chicago	.99	.94
	Decatur	.86	.83
	Moline	.86	.83
	Peoria	.86	.82
	Rockford	.85	.82
	Springfield	.92	.89

		LABOR URBAN AREA	LABOR RURAL AREA
INDIANA	Evansville	.76	.73
	Fort Wayne	.75	.72
	Gary	.99	.96
	Indianapolis	.86	.82
	South Bend	.77	.74
IOWA	Council Bluffs	.74	.71
	Davenport	.86	.83
	Des Moines	.72	.68
	Dubuque	.65	.62
	Sioux City	.63	.61
KANSAS	Topeka	.79	.75
	Wichita	.68	.65
KENTUCKY	Bowling Green	.64	.62
	Lexington	.68	.66
	Louisville	.68	.65
LOUISIANA	Baton Rouge	.71	.69
	New Orleans	.75	.72
	Shreveport	.69	.67
MAINE	Bangor	.60	.58
	Portland	.60	.57
MARYLAND	Annapolis	.68	.66
	Baltimore	.71	.67
MASSACHUSETTS	Boston	.90	.86
	Springfield	.85	.82
	Worcester	.82	.79
MICHIGAN	Detroit	1.00	.95
	Flint	.93	.90
	Grand Rapids	.60	.58
	Lansing	.78	.75
MINNESOTA	Duluth	.83	.79
	Minneapolis	.84	.81
MISSISSIPPI	Jackson	.62	.60
MISSOURI	Kansas City	.83	.80
	Springfield	.64	.62
	St. Louis	.82	.78
MONTANA	Billings	.66	.64
	Butte	.66	.63
	Great Falls	.69	.67
NEBRASKA	Lincoln	.55	.53
	North Platte	.55	.53
	Omaha	.74	.70
NEVADA	Las Vegas	.94	.89
	Reno	.94	.89

ROOFING and SIDING Water and Dampproofing, etc.		LABOR URBAN AREA	LABOR RURAL AREA
NEW HAMPSHIRE	Manchester	.54	.52
NEW JERSEY	Atlantic City	.92	.89
	Camden	1.08	1.04
	Dover	1.00	.97
	Jersey City	1.08	1.03
	Long Branch	.99	.96
	Mount Holly	.97	.94
	Newark	1.00	.95
	Toms River	.99	.96
	Trenton	.97	.92
	Vineland	.92	.89
NEW MEXICO	Albuquerque	.61	.58
	Clovis	.49	.47
	Las Cruces	.49	.47
	Santa Fe	.46	.44
NEW YORK	Albany	.86	.83
	Binghamton	.76	.73
	Buffalo	.89	.85
	Mineola, L.I.	1.08	1.03
	New York City	1.08	1.03
	Riverhead, L.I	1.08	1.04
	Rochester	.92	.89
	Syracuse	.97	.94
	White Plains	1.01	.96
	Yonkers	1.01	.96
NORTH CAROLINA	Asheville	.46	.44
	Charlotte	.47	.45
	Greensboro	.48	.46
	Raleigh	.48	.46
NORTH DAKOTA	Bismark	.61	.59
	Fargo	.61	.58
	Minot	.61	.59
OHIO	Akron	.89	.86
	Cincinnati	.94	.89
	Cleveland	1.02	.97
	Columbus	.99	.96
	Dayton	.87	.83
	Toledo	1.00	.97
	Youngstown	.92	.89
OKLAHOMA	Oklahoma City	.77	.73
	Tulsa	.77	.74
OREGON	Eugene	.77	.74
	Portland	.86	.82
PENNSYLVANIA	Erie	.78	.75
	Harrisburg	.84	.80
	Philadelphia	1.03	.98
	Pittsburgh	1.02	.97
	Scranton	.80	.77

		LABOR URBAN AREA	LABOR RURAL AREA
RHODE ISLAND	Providence	.85	.81
SOUTH CAROLINA	Charleston	.46	.44
	Columbia	.46	.44
	Greenville	.46	.44
SOUTH DAKOTA	Rapid City	.75	.71
	Sioux Falls	.75	.71
TENNESSEE	Chattanooga	.68	.66
	Knoxville	.59	.56
	Memphis	.73	.69
	Nashville	.62	.59
TEXAS	Amarillo	.45	.43
	Dallas	.69	.66
	El Paso	.47	.45
	Fort Worth	.67	.65
	Houston	.71	.67
	San Antonio	.50	.48
UTAH	Salt Lake City	.76	.72
VERMONT	Burlington	.79	.75
VIRGINIA	New Port News	.46	.44
	Norfolk	.46	.44
	Richmond	.46	.44
	Roanoke	.46	.44
WASHINGTON	Seatle	.80	.76
	Spokane	.77	.74
WEST VIRGINIA	Charleston	.83	.79
	Huntington	.78	.75
WISCONSIN	Madison	.76	.73
	Milwaukee	.89	.72
WYOMING	Casper	.71	.69
	Cheyenne	.75	.71
CANADA			
Calgary, Alberta		.77	.74
Montreal, Quebec		.81	.77
Ottawa, Ontario		.68	.65
Quebec, Quebec		.70	.67
Toronto, Ontario		.93	.88
Vancouver, British Columbia		.64	.62
Winnipeg, Manitoba		.64	.62

Table 2.1

SECTION 3

CHARACTERISTICS OF MAINTENANCE

Maintenance is the general servicing, repair or replacement of a component, system, or piece of equipment. There are basically two phases of any maintenance program: Preventative and corrective maintenance.

Preventative maintenance programs are planned and scheduled procedures which are inacted to retain a component at a specified performance level. This may be accomplished by providing systematic inspections for the detection and prevention of inpending failures. A preventative maintenance plan for equipment or systems should minimize the frequency and difficulty of servicing, while providing maximum performance and prolonged life. These preventive maintenance programs should be established by the manufacturers of the system's components.

Corrective maintenance programs are procedures performed as a result of failure in order to restore a component or system to its designed level of performance. Tasks included in such programs include testing, failure isolation, and repair/replacement.

Should an owner determine not to implement a planned maintenance program, then the equipment will operate until it fails. This is, however, not a recommended approach. If a general maintenance program is not adhered to, it is recommended that any safety devices in the system be periodically inspected to insure operability.

All maintenance programs include to some degree the following:

1. Management maintenance policy, which consists of the objectives and type of maintenance program, the personnel required, organization, performance schedules, and cost information.

2. Records of the systems, systems components, and associated equipment including:

   a. Construction drawings and specifications

   b. As-built drawings

   c. Shop drawings and equipment catalogs

   d. Servicing instructions, maintenance instructions, troubleshooting checklists and spare parts lists.

   e. Service and spare parts sources.

   f. Systems diagrams.

3. Procedures and Schedules. This is the most important part of the maintenance program and relates to the operation, inspection, servicing, repairing and replacement of components and equipment. At a minimum, it includes the following requirements:

   a. Operating instructions.

      1. Starting and shutdown procedures.

      2. Seasonal adjustments.

      3. Logging and recording.

   b. Inspection

      1. That equipment to be inspected

      2 Points of inspection

      3. Time of inspection

      4. Methods of inspection

      5. Evaluation, recording and reporting

   c. Service and repair

      1. Frequency of service

      2. Service procedures

      3. Repair procedures

      4. Reporting

5. Operating and Maintenance Manuals. Operating and maintenance manuals provide instructions and information pertaining to the overall system. These manuals should be prepared by the system designer in conjunction with and/or including the component manufacturer's appropriate maintenance information. All preventive maintenance procedures should be included with adequate information to perform the necessary procedures. Required routine maintenance actions should also be included in the maintenance manual and are typically incorporated on a permanent label attached to the equipment. However, this label may merely indicate the required procedure which is more greatly explained in the operation and maintenance manual.

The operation and maintenance manual can be organized in two parts, with Part I containing information on the system, and Part II covering the equipment components in the overall system.

3.1 CHARACTERISTICS OF RESIDENTIAL MAINTENANCE

In the residential sector, the owner is the principal charged with the responsibility of maintenance. It is the owner's responsibility to establish, in a broad sense, the maintenance program for his residence. His policy will determine:

a. What type of maintenance program to adopt.

b. Whether to provide for operation and maintenance by contract or on his own.

The housing sector consists of two categories -- single family and multi-family dwellings. Within each of these categories, the residence can be owned or rented. In general, the players involved in the maintenance tasks will be different for the two categories of dwellings and the two owner types.

Briefly, single family dwellings, which are rented, and multi-family dwellings, which are rented or owned, will be maintained under contract or by arrangement between the owners and a qualified maintenance person. In the case of apartments, townhouses, and condominiums, a general maintenance person is typically on staff and is capable of performing general maintenance and, in some instances, more difficult/specialized maintenance procedures. The costs for these operations when performed by an on-staff maintenance person will be different than those outlined in this report.

Investigation of the estimated U.S. housing inventory may be a good general indicator of the likelihood of which maintenance procedures and schedules will be met. Of the estimated 75 million dwellings in place, approximately 70% are single family dwellings. Therefore, the majority of residences are maintained by the owner or his appointee. The general skill level of the homeowner allows for the execution of relatively easy and minor maintenance practices. These include such items as cleaning and painting and in some cases lubricating and minor adjustments. However, detailed and technical maintenance practices are not typically performed by the homeowner. These more complex tasks are carried out by more qualified individuals who are contracted under a short-term or long-term agreement.

3.2 CHARACTERISTICS OF RESIDENTIAL MAINTENANCE RELATIVE TO PHOTOVOLTAICS

The maintenance of photovoltaic panels and arrays in residential applications requires varying skill levels in order to accomplish the many and varied maintenance tasks associated with these devices. Maintenance tasks which are specifically related to photovoltaic panels include: panel replacement, cleaning, wiring repair, termination repair, and problem detection. There are also many general maintenance procedures which will be performed on the photovoltaic array in order to maintain a specified array output over the life of the system.

Of the above mentioned tasks, only general maintenance procedures, such as painting, partial cleaning, and perhaps visual inspection, will be performed by the typical homeowner. The remainder of these tasks will be performed under contract or by arrangement by professionals.

It is important to note the photovoltaic array is not a complex apparatus, it is an electrical generator. To the general homeowner, electricity is a dangerous and complex phenomenon. Therefore, in the minds of most homeowners only qualified personnel should perform maintenance tasks on electrical equipment. Special problems arise when dealing with photovoltaic panels, as they are electrically active when exposed to light. This increases the general fear factor related to working on electrical equipment and decreases the likelihood of homeowner involvement in maintenance/repair operations. With photovoltaic panels being electrically active during daylight hours, special precautions must be taken before any maintenance tasks can be performed. As several of these procedures are required on the systems level it is important that the system designer have a good understanding of the potential maintenance procedures required during the life of the system. Prior to working on the array, the array should be placed in an open circuit mode at the main junction box and

labeled to insure the system is not reactivated by others at the site. The system should be placed in a shorted condition. It is important to measure for leakage current to ground as well as any leakage current through the frame of the system. As an overall precaution, the system should not be considered safe until checked with the appropriate measurement. The array is then ready for any maintenance procedures.

Specific safety procedures must be developed for individual photovoltaic power systems. Each component in a system should be supplied from the manufacturer with an instruction manual which should include a description of all safety precautions and procedures. The system designer or the system supplier should provide a systems maintenance manual describing all maintenance procedures and schedules detailing the necessary safety procedures. By adhering to the guidelines established in the maintenance manual the array should be in a "safe condition" before maintenance actions are initiated.

For a detailed description of an example safety procedure related to photovoltaic arrays, see "Safe Procedures for the 25kw Solar Photovoltaic Array at Mead, Nebraska" by Massachusetts Institute of Technology Lincoln Laboratory, 7 April 1978. The safety procedures recommended by the manufactureers and the photovoltaic systems designer must be adhered to in order to insure the safe and successful performance of all maintenance actions.

SECTION 4

PANEL/ARRAY DESIGN

In order to evaluate the operation and maintenance procedures and costs for photovoltaic arrays, it is necessary to define several characteristics of the array. These characteristics are:

1. Panel/Array Mounting Type
2. Installation/Replacement Type
3. Panel/Array Detail

4.1 PANEL/ARRAY MOUNTING TYPE DESCRIPTION

Four generic mounting types have been identified and defined in the "Residential Module and Array Requirement Study" prepared by Burt Hill Kosar Rittelmann Associates for the Jet Propulsion Laboratory, Report #DOE/JPL/955149-79/1. Mounting types are:

1. Rack Mounting
2. Standoff Mounting
3. Direct Mounting
4. Integral Mounting

Figure 4.1 shows the four mounting types and potential panel/array details. Several important characteristics of these mounting types must be understood before operation and maintenance procedures can be described. The following is a brief description of each of these mounting types:

1. Rack Mounting: Rack mounted photovoltaic arrays can be located on the ground away from the residence or on the roof of the residence. Of the four mounting types, rack mounted panels are perhaps the

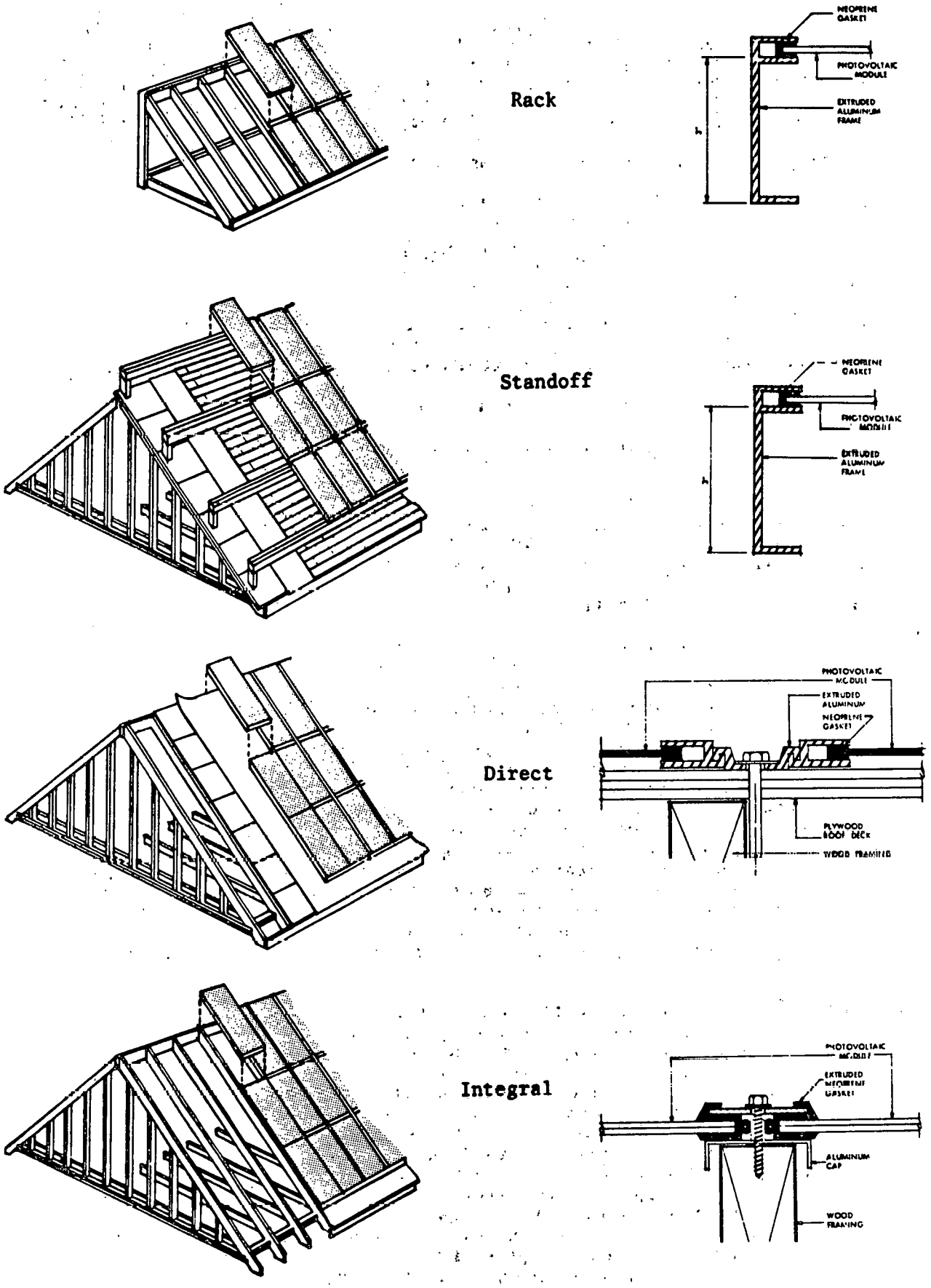
Rack
NEOPRENE GASKET
PHOTOVOLTAIC MODULE
EXTRUDED ALUMINUM FRAME
Standoff
NEOPRENE GASKET
PHOTOVOLTAIC MODULE
EXTRUDED ALUMINUM FRAME
Direct
PHOTOVOLTAIC MODULE
EXTRUDED ALUMINUM
NEOPRENE GASKET
PLYWOOD ROOF DECK
WOOD FRAMING
Integral
PHOTOVOLTAIC MODULE
EXTRUDED NEOPRENE GASKET
ALUMINUM CAP
WOOD FRAMING

Figure 4.1

easiest to install and maintain. This is due to the relative ease of accessibility to both the front and back surfaces of the panel. This is especially true of ground mounted arrays. Panels can be easily cleaned, wiring systems are easily accessible, and generally, mounting systems are easily reached for panel replacement. Also, as this mounting type does not require array waterproofing, a minimum amount and number of materials are used in this installation. Therefore, during maintenance procedures, such as panel replacement, additional costs are not required for the replacement of expensive materials other than the panel itself, i.e. no expensive gaskets or waterproofing materials are required.

There are, however, some drawbacks to rack mounting of PV arrays. Structural costs, both initial and maintenance, can be high for this type of mounting technique. As seen in earlier studies the use of wood is recommended for rack mounted arrays. This implies either specially treated woods or the painting of the rack structure. This requires additional maintenance tasks be performed over the life of the array. Another critical problem associated with rack mounted arrays and related to the maintenance of such arrays is the areas around the roof penetration caused by the rack. Special detailing and care must be given to these roof penetrations to insure the watertight integrity of the roof.

2. Standoff Mounting: Elements that separate modules or panels from the roof surface are known as standoffs. By supporting the panel away from the roof surface, air and water can pass freely into the module. However, the panel to roof surface distance is typically small, on the order of six inches, and does not allow the easy access of the rear surface of the panel. This implies, that all installation and maintenance procedures need to be performed from

the easily accessed top surface. This will require specially designed mounting details and electrical integration details.

However, this mounting type does utilize fewer materials associated with structural support of the array. As with the rack mounted arrays, special attention must be given to the detailing of any roof penetrations. This implies that the overall installation costs for a standoff mounted array will be less than that associated with a rack mounted array. This does not imply that the costs relative to operation and maintenance will be lower. Unless considerable effort is employed in the design of the array, the standoff mounted array will be extremely difficult and costly to maintain.

3. Direct Mounting: Installation of direct mounted panels is accomplished by attaching the panels directly to the roof surface. This mounting type eliminates the need for additional structural supports. Special care must be used in developing and detailing direct mounting modules as they act as a waterproof membrane. If a typical panel is used, perimeter waterproofing is needed; if shingles are used, the simple overlapping technique will afford a watertight surface.

Due to the direct mounted system's inherent contact with the roof, several major problems exist. These problems are similar to those experienced when using a standoff mounted system. It is necessary for all installation and electrical detailing to occur on the exposed surface, thus allowing easy installation, maintenance and repair procedures.

With shingle type modules, special consideration must be given to

the maintenance procedure as the interruption of surrounding modules must be minimized to reduce the probability of damaging additional modules. A more detailed discussion of this problem can be found in Section 4.2 Installation/Replacement Type Description.

4. Integral Mounting: Integrally mounted panels are placed within the roof structure itself. The panels are supported by the existing roof structural framing members and serve as the finished roof surface. Therefore, the roof becomes a waterproof membrane. With the array acting as the roof, special problems exist. In the event that a photovoltaic panel must be removed, it is imperative that a replacement be installed immediately. Without a replacement, the roof is then open to the weather increasing the risk of damage to the interior of the house.

   Installation and electrical connections, as well as maintenance procedures, can be performed from the attic area of the residence; provided the panels are not attached above a cathedral ceiling. This mounting technique allows for venting of the back surface of the panel. However, uneven heating of the array may occur in the event that improper venting occurs in the attic space. Therefore, care must be taken during the maintenance operation to insure that the proper replacement of any installation material in the dead space of the attic ceiling or cathedral ceiling takes place.

   Maintenance operations associated with the repair and replacement of wiring, the detection of electrical problems, and the general electrical testing of the array can take place during any weather conditions, as these operations can take place under the cover of the residence. It should also be noted that no additional roof structure and associated maintenance of said structure will be required in this mounting system.

4.2 INSTALLATION/REPLACEMENT TYPE DESCRIPTION

In panelized construction there are three categories into which installation and maintenance operations may fall. These classifications relate to the installation/replacement type and the procedures necessary to perform these operations. These three categories are:

1. Sequential
2. Partial Interruption
3. Independent

Each of these categories imposes certain design, installation and maintenance requirements on the panel and array. Both the installation, and operation and maintenance costs will be considerably different for the three categories.

The following is a brief description of each of the three panel construction types:

1. Sequential: Sequential paneling requires the successive installation and/or removal of panels. A good example of sequential paneling installation is seen in the installation of shingles. The rows are installed successively in courses from vent to ridge. It is not unlikely in a sequential paneling installation to find the first panel installed is the last panel removed. In the event that this first installed panel is damaged or requires replacement, all of the preceeding panels must be removed in order to replace the damaged panel.

   Due to the sequential nature of this panel construction type, costs can be reduced as components of the system can be shared. However,

this construction type is the most expensive from a maintenance standpoint. In order to successfully utilize sequential paneling for photovoltaic systems, it is necessary to reduce the need for maintenance, requiring replacement of panels, by insuring long, uninterrupted life of the panel. This requirement may impose severe restrictions on the materials and packaging of photovoltaic arrays. Therefore, it is necessary to perform a thorough optimization relating initial costs and maintenance costs over the expected life of the system.

Due to the potential for high maintenance costs associated with sequential paneling systems, it is not likely in the near future to find photovoltaic arrays requiring strict sequential paneling techniques in maintenance operations. It is possible, however, to have panels requiring sequential installation but not sequential removal for maintenance purposes. The shingle module is a perfect example of this type panel.

2. Partial Interruption: A building panel which falls into a partial interruption category can be replaced by disturbing only the adjacent panels. This technique will be more expensive to use for the installation of panels but less expensive to maintain than the sequential paneling technique. It will be possible in this technique for adjacent panels to use common parts. However, due to the use of common parts it becomes necessary to disturb the surrounding panels during certain maintenance procedures, such as panel replacement. In the event that a panel must be removed from this type system, it is necessary to replace it immediately with a new panel or a dummy panel to insure the integrity of the mounting system.

3. Independent: Independent paneling is a panelized construction where panels can be installed, removed and replaced for maintenance with no additional interruptions or disturbances of the surrounding panels. This panelized construction technique is the least expensive from a maintenance labor standpoint and from an installation labor standpoint. However, materials cannot be shared by adjacent panels thus increasing the materials costs associated with this technique.

Each of these installation/replacement types require different panel edge detailing. In order to generate cost data for maintenance procedures it will be necessary to generate panel edge details associated with each panel/array mounting type and installation/replacement type. The following section 4.3 Panel/Array Details will explain individualized panel edge details.

4.3 PANEL/ARRAY DETAILS

The finest level of detail associated with the design of a photovoltaic array is that of the panel edge details. These details will strongly influence, not only the installation costs, but, perhaps more critically, the maintenance costs associated with the replacement of a panel. This section will describe a number of details, which were generated for this study.

Recalling from the previous section that there are three types of panelized construction,

- Sequential
- Partial interruption
- Independent

specific details for each can be generated. In some cases, however, these edge details can be utilized in installations using any of the basic mounting configurations.

Figure 4.2 shows a detail utilizing sequential paneling techniques for both installation and maintenance operations. It can be seen that the transverse section does not require gasketing material, but the longitudinal section employs gasket material in order to insure a watertight membrane. Therefore, the overall installation costs associated with this type edge detail can be reduced when compared to other details described in this section. During the maintenance operation, however, other panels in the column and row must be disturbed. Another important feature of this detail, is the possibility of incorporating the electrical interconnects in the mechanical interconnect associated with the transverse section. This will likewise reduce the installation, as well as the maintenance costs.

It is possible to have a panelized construction module that uses sequential installation techniques but can be classified in the partial interruption category for maintenance purposes. The photovoltaic shingle module is an example of such a device. Figure 4.3 shows a portion of a photovoltaic array using the shingle module. The shingles are installed in rows moving sequentially from eave to ridge. The replacement of a shingle requires only partial interruption for maintenance purposes. As with the previous detail, gasketing material is not required for this detail to function as a watertight membrane.

The details depicted in Figure 4.4 are examples of edge details used in an integral or direct partial interruption installation. This technique requires the use of extensive gasketing material to insure watertight integrity. Also, during a maintenance procedure which requires the removal of a panel, the four surrounding panels must be disturbed. This increases

the probability of damage to other panels and their gasketing material. This edge detail, however, is similar to those typically used in the glazing industry and is a tried and proven method for the installation of glass panels.

Figure 4.5 shows two details which can be used as vertical joints in an integral or direct independent mounting system. These details provide a waterproof membrane without the use of gasketing material and provide for quick and easy installation. The horizontal joints are made by simply overlapping the panels. With the use of a special tool, the removal of a panel becomes a relatively simple operation.

The simplest edge detail studied can be seen in Figure 4.6. This detail can be used in rack and standoff applications, and is an example of an independent panelized construction type. The panels surrounding a panel requiring replacement will not be distrubed. This detail is extremely simple to install, and the maintenance operations required can be performed with little problem. However, this example is in need of additional support structure in order to be utilized in an application. This will, of course, increase the overall installation cost, but will have little effect on the maintenance costs.

Again, it is important that these are example details only used for costing purposes in the following sections. Care must be used when attempting to use these details for cost comparison purposes.

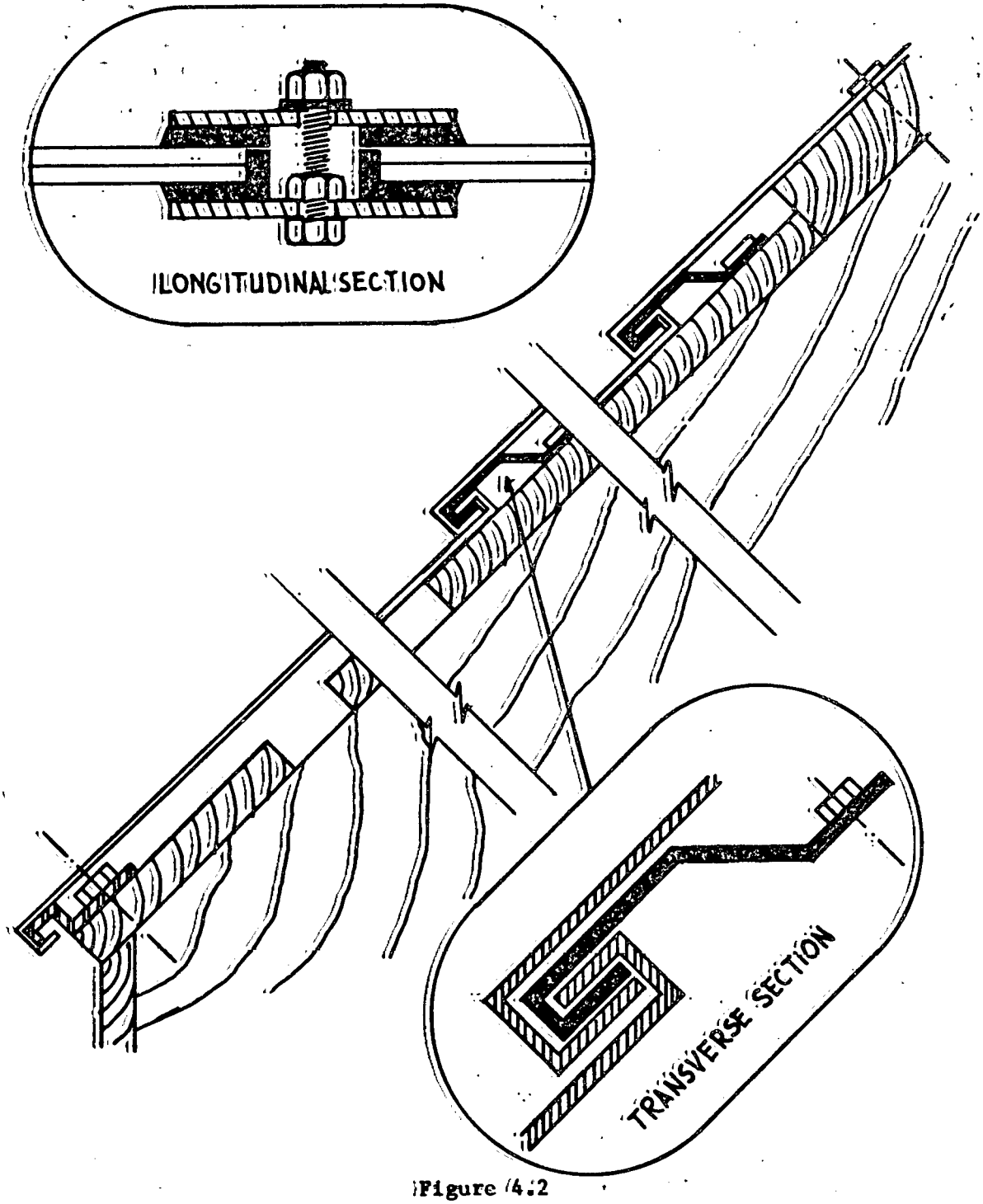

Figure 4.2

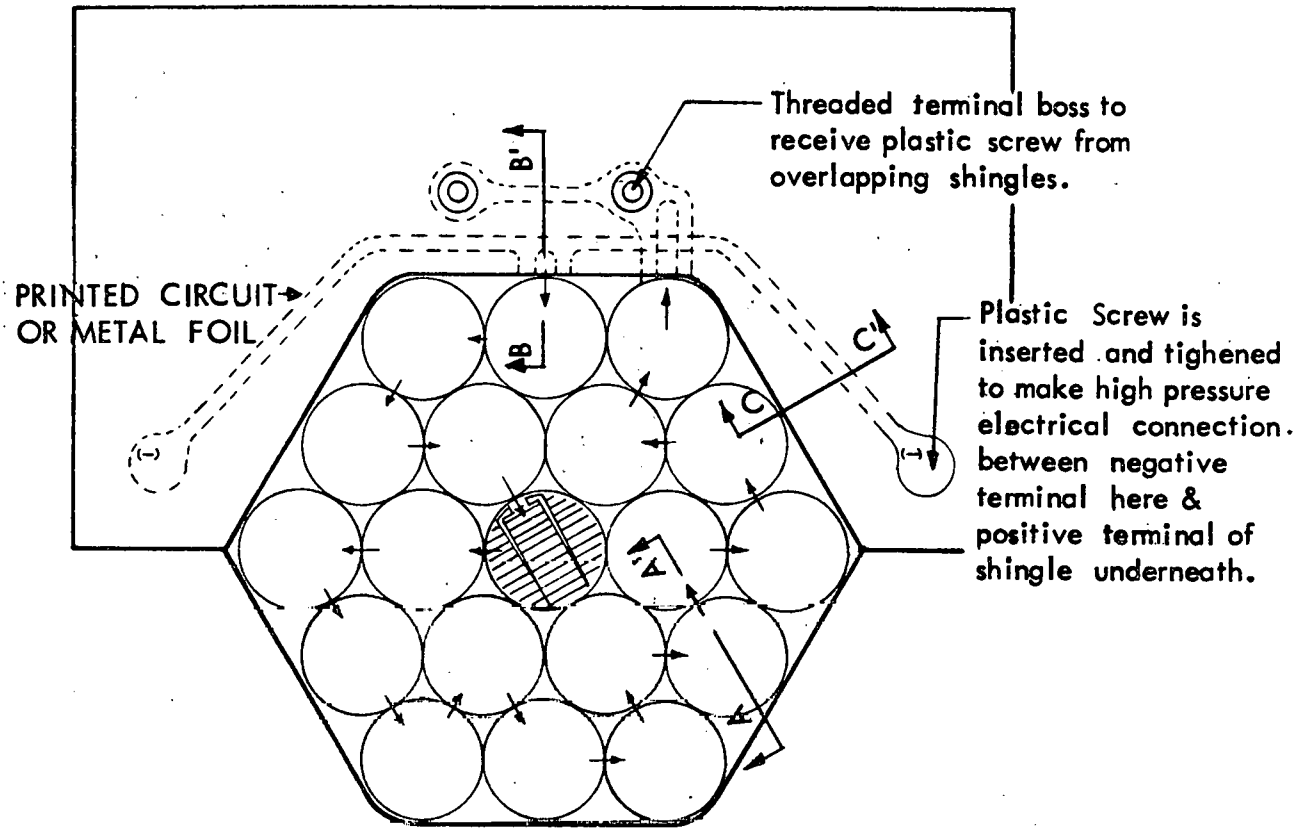
Threaded terminal boss to receive plastic screw from overlapping shingles.
PRINTED CIRCUIT OR METAL FOIL
Plastic Screw is inserted and tighened to make high pressure electrical connection. between negative terminal here & positive terminal of shingle underneath.
B'
B
C'
C
A'
A

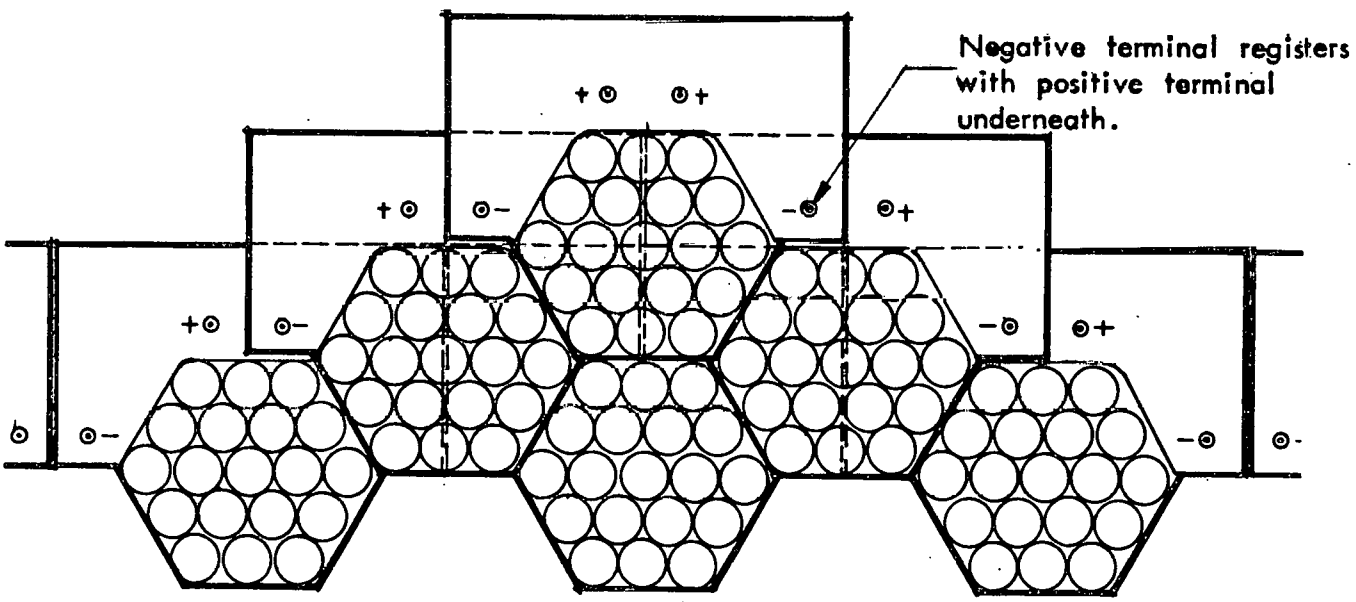
Negative terminal registers with positive terminal underneath.

Figure 4.3

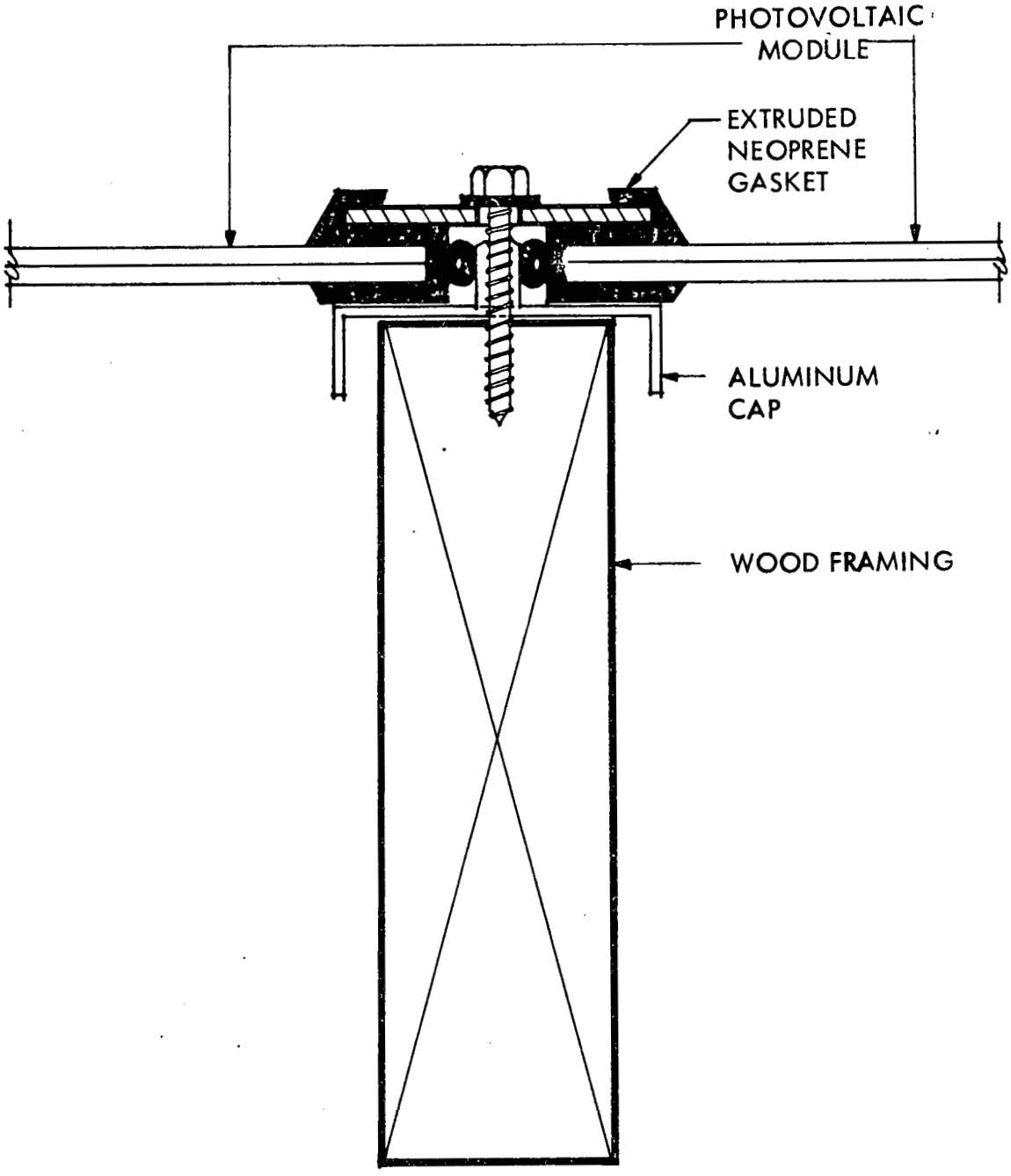
PHOTOVOLTAIC
MODULE
EXTRUDED
NEOPRENE
GASKET
ALUMINUM
CAP
WOOD FRAMING

Figure 4.4

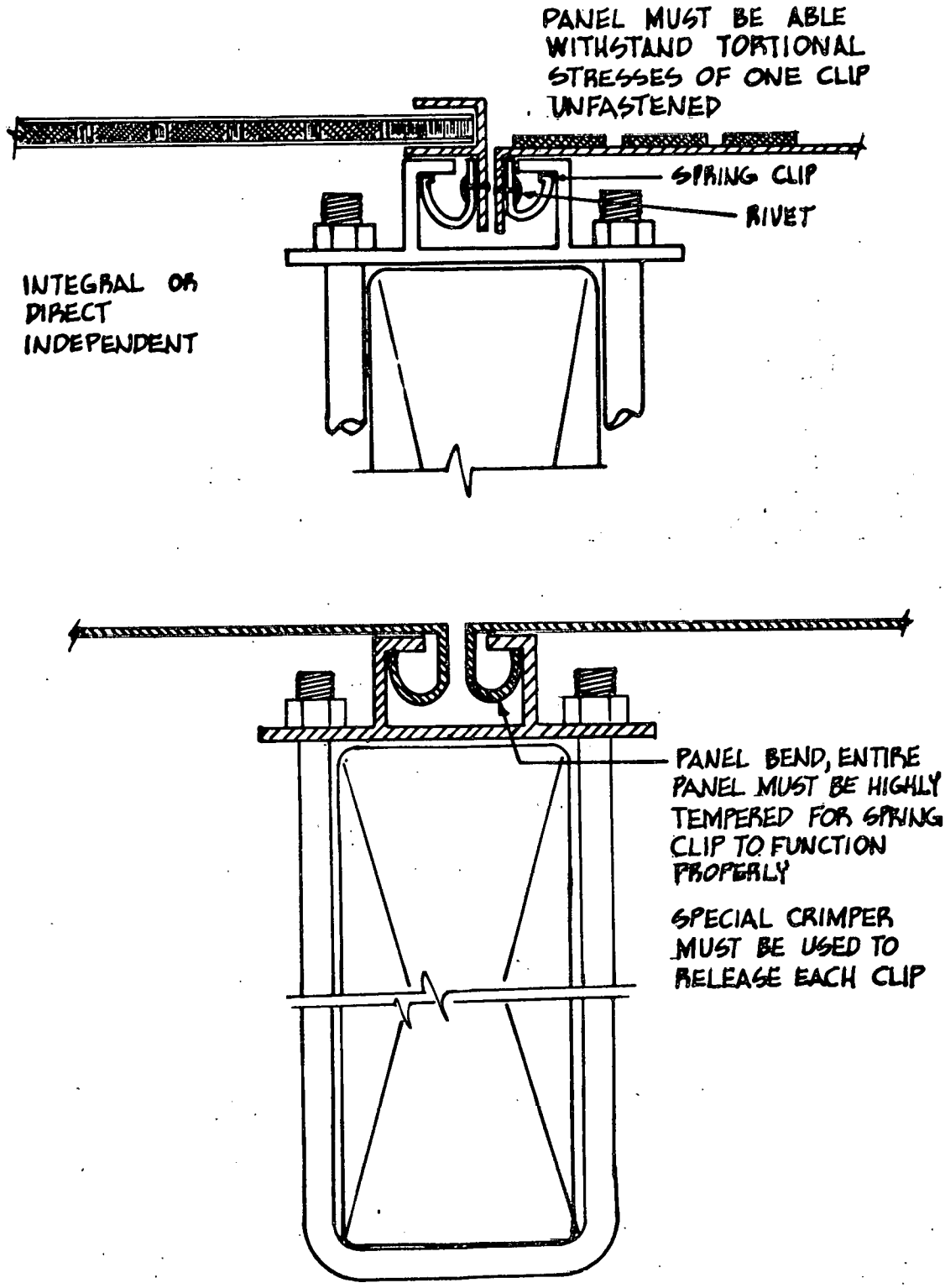
PANEL MUST BE ABLE WITHSTAND TORTIONAL STRESSES OF ONE CLIP UNFASTENED
SPRING CLIP
RIVET
INTEGRAL OR DIRECT INDEPENDENT
PANEL BEND, ENTIRE PANEL MUST BE HIGHLY TEMPERED FOR SPRING CLIP TO FUNCTION PROPERLY
SPECIAL CRIMPER MUST BE USED TO RELEASE EACH CLIP

Figure 4.5

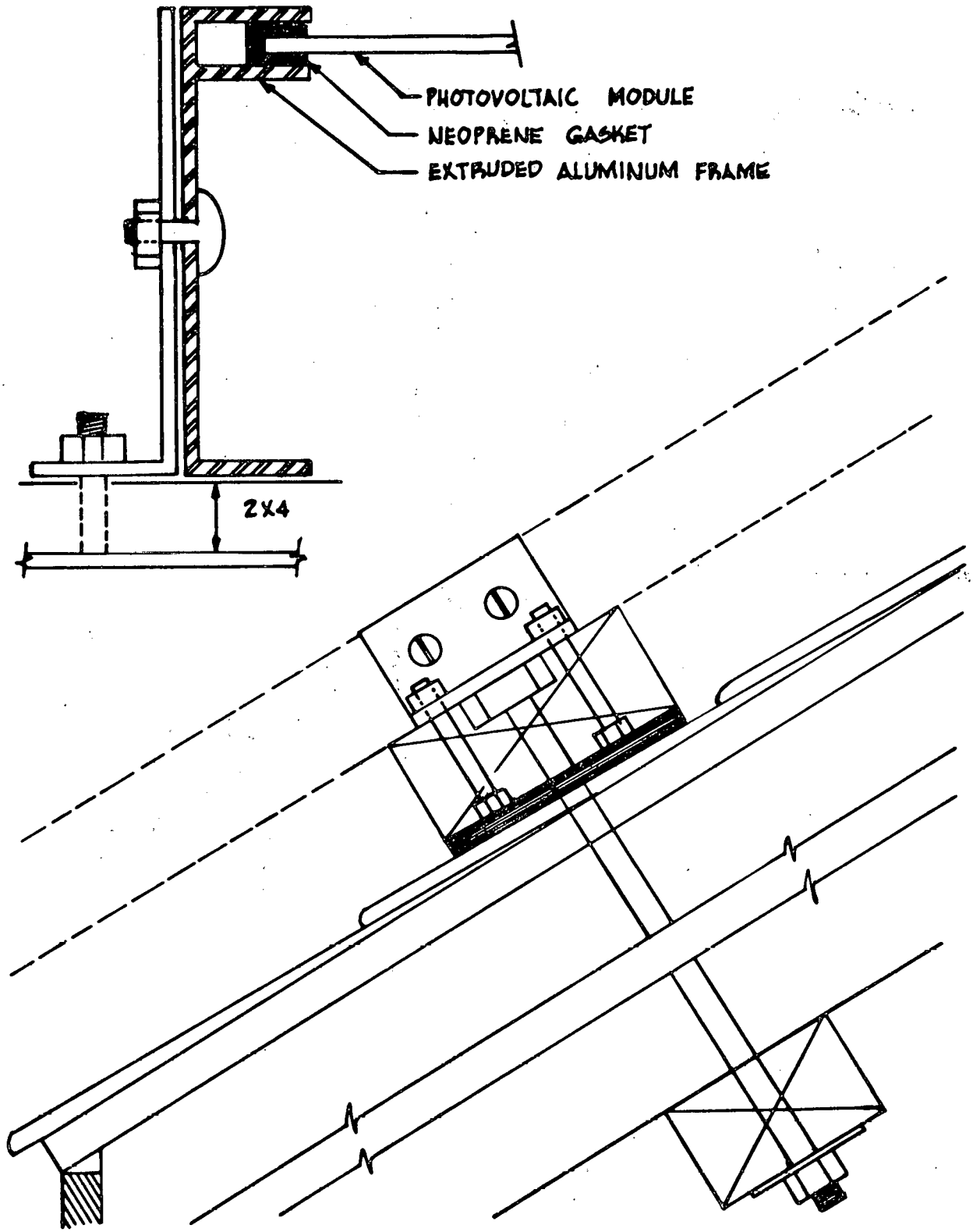
PHOTOVOLTAIC MODULE
NEOPRENE GASKET
EXTRUDED ALUMINUM FRAME
2X4

Figure 4.6

SECTION 5

OPERATION/MAINTENANCE

There are six basic topics pertaining to the operation and maintenance of photovoltaic arrays which will be discussed in this section. These general topics include:

1. General (normal) Maintenance
2. Cleaning
3. Panel Replacement
4. Gasket Repair/Replacement
5. Wiring Repair
6. Termination Repair

Under each of these topics, where possible, a standard procedure was used to identify operation and maintenance problems, procedures, and costs. The basic procedure used was first to identify problems associated with each of the above mentioned topics. The problem statement is followed by a detailed description of maintenance procedures. Having previously identified mounting and panel construction details, costs were identified to perform the appropriate maintenance procedures. In order to complete the operation and maintenance cost study cost drivers were identified, and methods for reducing these costs have been recommended.

It is important to note that the costs generated in this study are detail and site specific, and care must be used when attempting to determine the applicability of these numbers relative to a manufacturer's specific panel detail. As photovoltaic panels and arrays are not in abundant use, it was necessary to use, where possible, numbers relative to the installation of components similar to the photovoltaic panels. Estimates of the amount of time necessary to perform certain installations and procedures were also used.

It is also important to note where detailed cost breakdowns are given, a contractor is not likely to quote a price for a maintenance procedure in as much detail as is given in this study. For example, where travel, set-up and clean-up are itemized, a contractor will provide a lump sum quote for the entire maintenance task. The cost operation will be the same on a residence 10 miles from the contractors site as one 30 miles from the site, as quoted by the contractor.

5.1 General (Normal) Maintenance

Normal maintenance is that maintenance which is required on a periodic basis to reduce the chance of failure and maintain an accepted level of performance. Actions involved in normal maintenance include visual, mechanical, and electrical inspection of panels, fasteners, and wiring. Also, some photovoltaic arrays may require portions of the structure be coated or painted in order to insure the integrity of the structural system throughout the expected life of the array. These normal maintenance procedures could easily be performed by the owner of the photovoltaic system or by a groundskeeper or by a general maintenance person. The required preventive actions depend on the panel design and the mounting type relative to materials selected and exposure of those materials to elements which could cause their degradation.

Visual inspections and mechanical inspections require the inspector to climb onto the roof, for roof mounted array, and across the array to gain access to each panel. For this reason, visual and mechanical inspections should be performed during the performance of another maintenance operation. Cleaning is one such operation which requires general access to the outer surface of the panels. If a defect does develop in a panel, visual inspection would be most revealing after the cleaning of the array. Having established accessibility to the array for visual inspections, two options are readily apparent:

Option 1: Cleaning personnel could be specially trained to locate

potential problems.

Option 2: The owner or qualified inspector could examine the panels during the cleaning operation, using ladders and/or scaffolding erected by the cleaning crew.

Superficial visual inspections could be performed by the owner at any point in time from any available vantage point.

Normal electrical inspections should be performed on the system level. The method is, therefore, a systems problem and therefore beyond the scope of this study.

Problems which may be identified by visual and mechanical inspection include, minor gaps between panels, loosened fastening devices, paint on frames or structures wearing or peeling, broken cover glazing, terminal boot damage, and terminal contact corrosion/oxidation.

Minor gaps between panels that form a watertight membrane may be sealed by caulking with an elastomeric caulking compound, if the gaps are not visually noticeable and if the panels have settled into a stable position. Major gaps resulting from poor design, poor installation or fastening devices, or from adverse weather conditions require more extension repair procedures. These procedures do not fall under the category of normal maintenance and will be dealt with in sections 5.3 and 5.4.

Loosened fastening devices could result from thermal cycling and/or wind induced uplift and vibration. Procedures necessary for the repair of loosened fastening devices could range from the simple tightening of these devices (if no damage to the fastener or panel has resulted), replacement of the fasteners (if threaded connections are stripped, bent or corroded),

to total panel replacement (if the fasteners are not removable from the panel).

There are two categories of painting associated with normal maintenance procedures:

1. Painting of the frames of the panels

2. Painting of the support structure

Painting of the panel frames may be required if those frames are of a corrosive material or if the architectural character demands the color of the frames be different than the natural color of the material from which they are made. Array rack structures may also require painting for the same reasons. The frequency of repainting will vary with the weatherability of the coating used on the material and the climatic conditions to which it is exposed. Painting operations are carried out by either the owner of the house or contracted to professional painters. Due to the location and the size of a residential photvoltaic array, the later, the professional painter, will most likely perform the painting operations.

The procedures necessary for painting include; cleaning the surface to be painted, scraping and sanding, and applying paint to the clean, smooth surface. Methods of applying paint to a surface include; brushing, rolling, and spraying.

Painting costs will vary with the surface area to be painted, the condition of the surface, the surface configuration, and accessibility. The costs listed in Table 5.1 for the painting of frames were generated from figures and formulas taken from Engelsman's, "1979 Residential Cost Manual" and an

overhead percentage developed from Means, "1979 Building Construction Cost Data File". These costs were for the application of one coat of oil based paint by brush. In order to establish costs for frame painting a typical array with the following specifications was used:

Array Size - 1,000 sq. ft.
Panel Sizes - 32" x 96", 32" x 48", 16" x 48",
16" x 24", 48" x 48"
Frame Perimeter - 21'-4"
Frame Width - 2" internal, 1" perimeter
Surface Area - 125 sq. ft.
Roof Height - 1 Story
Slope 45°

The costs for painting a steel rack structure which supports the photovoltaic array were based on surface area, in square feet, multiplied by the cost per square foot for painting steel window sashes. Surface area was determined by examining the surface area per ton for light structural steel listed in Means 1979 Building Construction Cost Data File multiplied by the weight in tons of steel for the rack structure, previously determined in Table 14-19 of the "Residential Photovoltaic Module and Array Requirement Study." The costs per square foot were obtained from Engelsman's, "1979 Residential Cost Manual."

The costs for painting a wood rack structure were also based on surface area in square feet multiplied by the cost per square foot for painting the trim. The surface area was determined from the number of board feet listed in Table 14-20 of the "Residential Photovoltaic Module and Array Requirement Study." A breakdown of these costs can be seen in Table 5.1.

Broken cover glazing, terminal boot damage and contact corrosion/oxidation will be identified by normal maintenance procedures, but their repair is

ARRAY SIZE	45'-4" x 24'-0"	45'-4" x 24'-0"	45'-4" x 24'-0"	45'-4" x 24'-0"	44'-0" x 24'-0"
PANEL SIZE	32" x 96"	32" x 48"	16" x 48"	16" x 24"	48" x 48"
1 FRAME EQUIVALENT AREA (Lineal Ft. x 2.5)	1535	1875	2895	3575	1490
2 PAINTING COST/SQ. FT. (Labor and Materials)	0.23	0.23	0.23	0.23	0.23
3 COST OF FRAME PAINTING (Labor and Materials)	$353.05	$431.25	$665.85	$822.25	$342.70
TRAVEL/TRANSPORTATION COST ($25.12/day)	$ 75.36 (3 days)	$ 75.36 (3 days)	$125.60 (5 days)	$150.72 (6 days)	$ 75.36 (3 days)
4 (ROOF) SET UP/CLEAN UP ($9.62/day)	$ 28.86 (3 days)	$ 28.86 (3 days)	$ 48.10 (5 days)	$ 57.72 (6 days)	$ 28.86 (3 days)
TOTAL FRAME PAINTING COST (ROOF)	$457.27	$535.47	$839.55	$1,030.69	$446.22
5 (GROUND) SET UP/CLEAN UP ($4.38/day)	$ 13.14 (3 days)	$ 13.14 (3 days)	$ 21.90 (5 days)	$ 26.28 (6 days)	$ 13.14 (3 days)
TOTAL FRAME PAINTING COST (GROUND)	$441.55	$519.75	$813.35	$999.25	$430.50

1 FRAME EQUIVALENT AREA = (Lineal Ft. of frame) x [(2.5) Multiplier used to compensate for the degree of difficulty in painting window frames.]

2 PAINTING COST/SQ. FT. = Labor and material costs for sanding, primer and one coat finish + 20% additional labor cost for sloped application.

3 COST OF FRAME PAINTING = (FRAME EQUIVALENT AREA) x (PAINTING COST/SQ. FT.)

4 TOTAL FRAME PAINTING COST (ROOF) = (COST OF FRAME PAINTING) + (TRAVEL/TRANSPORTATION COST) + [(ROOF) SET UP/CLEAN UP COST]

5 TOTAL FRAME PAINTING COST (GROUND) = (COST OF FRAME PAINTING) + (TRAVEL/TRANSPORTATION COST) + [(GROUND) SET UP/CLEAN UP COST]

Table 5.1 Frame Painting Costs

32x96 (Panels) RACK STRUCTURE PAINTING COSTS (costs for 1 field coat brush, light framing)		
Rack Structure	Wood	Steel
Rack Equivalent Area (RPMS)	2,114 S.F.	1,690 S.F.
Painting Costs/Sq.Ft.	$0.15	$0.15/S.F.
Cost of Frame Painting Operation	$317	$253.50/S.F.
Travel Time (Cost) $25.12	$75.36 (3 Days)	$50.24 (2 Days)
Ground Set Up/Clean Up $4.38/day	$13.14	$ 8.76
TOTAL RACK PAINTING COST	$405.5	$312.50

Table 5.2 Rack Structure Painting Costs

TOTAL PAINTING COSTS (32"x96" Panels) (8'x133') Array		
Rack Structure	Wood	Steel
Rack Painting Cost	$405.50	$312.50
Metal Frame Painting Cost (32 x 96)	$441.55	$441.55
TOTAL PAINTING COST (Rack + Frame)	$847.05	$754.05

Table 5.3 Total Rack and Frame Painting Costs

HOURLY LABOR RATE (Painting)

QUANTITY	LABOR TYPE	COST/HR	SOURCE	COMMENTS
1	Painter Overhead 31% TOTAL	$ 8.00 $ 2.50 $10.50	Engelman's 1979 Residential Cost Manual Means 1979 Building Construction Cost Data	Profits are not included Normal profits are 10% of the total cost.

TRANSPORTATION & TRAVEL COST

	TIME REQUIRED	AVE.COST	OPERATION	COMMENTS
	30-45 Min.	$ 6.56 $ 6.00 $12.56	Travel to site Transportation to site Travel/Transportation to Site	Hourly Labor Cost x hours required $0.30/mile x 20 miles
	30-45 Min.	$ 6.56 6.00 $12.56	Travel from site Transportation from site Travel/Transportation from site	Hourly Labor Cost x hours required $0.30/mile x 20 miles
		$12.56 $12.56 $25.12	Travel/Transportation to site Travel/Transportation from site TOTAL TRAVEL/TRANSPORTATION	

SET UP/CLEAN UP (Painting)

LOCATION	TIME REQUIRED	AVE.COST	OPERATION	COMMENTS
ROOF	25-30 Min. 25-30 Min.	$ 4.81 4.81 $ 9.62	Set Up Ladders & Equipment Clean Up Ladders & Equipment TOTAL ROOF SET UP/CLEAN UP	Estimate
GROUND	10-15 Min. 10-15 Min.	$ 2.19 2.19 $ 4.38	Set Up Tools & Equipment Clean Up Tools & Equipment TOTAL GROUND SET UP/CLEAN UP	Estimate

Table 5.4 Painting Cost Base

not a normal maintenance procedure. Rectification of these problems are corective in nature and will be discussed later in this section.

5.2 Cleaning

The deposition of airborne dirt particles on photovoltaic panels has historically been one of the most significant factors relative to power output degradation in experimental photovoltaic power systems. Although the presence of particulants is universal, the rate of accumulation and type of particulant buildup will vary with each location and with the ability of the cover glazing material to retain dirt. Categorically, urban, suburban and rural locations show great differences in the rate of accumulation and type of airborne particle.

Possible cover glazing materials can be divided into several categories; inorganic glass sheet, acrylic sheet, fiberglas reinforced sheet, polyester film materials, and laminated polycarbonate films. Acrylic sheet displays the greatest dirt accumulation, and inorganic glass sheet and laminated polycarbonate films retain the least amount of dirt particles.

Cleanability, the ease of removing dirt particles from the surface, relies on the bond between the cover glazing and the dirt particles. The bond strength is related to the porousity, surface texture, and chemical stability of the cover glazing, as well as, the chemical stability of the dirt particles. Non-porous, smooth textured, chemically stable materials tend to be easily cleaned with a variety of cleaning solutions, while porous, rough textured, chemically unstable materials require more effort with special cleaning solutions, mild enough to leave the chemical makeup of the material unchanged. As a result of the crystalline bond within inorganic glass sheets, glass is easy to clean. The weak bonds in acrylic sheets are easily broken by a variety of chemical solutions, and are,

therefore, easy to scratch and difficult to clean.

Transparent materials currently used in residential applications, with the exception of replaceable storm windows and skylights, have been limited to inorganic glass sheets. Operations for cleaning glass in the home are normally performed by the owner of the residence. Motives for cleaning include the need for an unobstructed visual release to the exterior of the home and the need to remove dirt which is easily noticed.

The cleaning sequence involves spraying an ammonia/water solution on the window, wiping the solution and dirt from the surface with a paper towel, and polishing the surface with a clean paper towel. In large residences, the window cleaning operation is contracted to window cleaning professionals. The cleaning sequence used by professional window cleaners begins with the sponging down of the glazing with an ammonia/water solution or a solution of trisodium phosphate in water, squegeeing the surface dry and wiping the perimeter of the glazing with a cloth.

Section 3 clearly points out the reluctance of homeowners to perform any maintenance procedures within the home. Cleaning is no exception, especially in remote locations such as the roof or the exterior windows located outside of convenient reach. This is exemplified by the lack of cleaning maintenance performed on the cover glazing of existing thermal collectors. It can, therefore, be assumed that photovoltaic panels will also suffer from this reluctance to perform even the most routine maintenance procedures.

Currently, photovoltaic panels are glazed with one of three materials; inorganic glass sheet, thin films and RTV silicon encapsulant. Although the purpose of these materials is the same, maintenance required to clean

them demonstrates the extremes in method and cleanability. Any of the methods previously discussed in this section can be used to clean inorganic glass sheet, but RTV silicon must be scrubbed twice with a solution of hot water and pumice. Experimental films and coatings over encapsulants similar to RTV silicon may increase the cleanability of the cover glazing only if the resulting surface is smooth and flat. Ripples and/or depressions in the surface will allow pockets of dirt to accumulate as these areas cannot be squeegeed.

Cleaning cost variables include but are not limited to, the time for performing the tasks required to clean the cover glazing material, the number and size of panels, and the gasketing/frame details used. (Panels having no perimeter frame or gasketing to obstruct cleaning operations could eliminate the need for wiping edges, thus reducing the number of tasks required, time required, and overall cost of the operation.) Total cleaning costs, however, also include costs inherent to all maintenance activity, such as material costs for transportation, equipment costs, general overhead, and labor costs for travel time and set up/clean up time. The costs given in Table 5.5 are estimates given by professional window cleaners based on a typical array with the following specifications:

Array Size: 1,000 sq ft.

Panel Size: 52 - 32"x96"

Shingle Size: 5" x 36"

Mounting Type: Direct Mount Roof, Rack Mount Ground

Frame/Gasket Type: Picture Frame

Roof Height: 1 Story

Slope: 45° from the horizontal

The labor figures involved were based on the following cleaning process:

- Sponge clean glazing with an ammonia/water solution or a solution of trisodium phosphate in water.

- Squeegee the surface dry

- Wipe the excess solution from the perimeter with a soft cloth.

In order to demonstrate the dramatic effect cleaning frequency has on cost, Table 5.6 presents life cycle costing data for the cleaning based on the estimates given in Table 5.5 and over a twenty-year design life. The basic conclusion, as a result, can only be, cleaning should not be a general maintenance procedure. A preferred method would be to instruct the owner to "hose down" the array on a periodic basis.

Cost drivers/methods for cost reduction:

- Materials used for cover glazing

  - Improve cleanability

  - Reduce frequency of cleaning due to dirt retention

- Accessibility of Array

  - Mount array on ground.

  - Provide ladder support over the face of the array that can be easily moved across the array while loaded, similar to the rolling ladders in bookstores and libraries. See Figure 5.1

  - Provide foothold or ledge between horizontal rows of panels.

CLEANING COST ESTIMATE			
Company \ Panel Size	32 x 96 (roof)	32 x 96 (ground)	Shingle (roof)
Penn Window Cleaning Company	$120	$ 90	$140
Civic Center Cleaning Company	$150	$115	$175
Town & Country Cleaning Company	$130	$100	$150
Expert Window Cleaning Company	$100	$ 75	$117
Acme Window Cleaning Company	Price requires access to all panels without ladders $ 40		

Table 5.5 Cleaning Costs

LIFE CYCLE CLEANING COST (20 yr. design life)				
Company (size/location) \ Frequency	12 mo.	6 mo.	3 mo.	1 mo.
Penn Window Cleaning Company (32"x96"/Roof)	$2,400	$4,800	$ 9,600	$28,000
Civic Center Cleaning Company (32"x96"/Roof)	$3,000	$6,000	$12,000	$36,000
Town & Country Cleaning Company (32"x96"/Roof)	$2,600	$5,200	$10,400	$31,200
Expert Window Cleaning Company (32"x96"/Roof)	$2,000	$4,000	$ 8,000	$24,000
Acme Window Cleaning Company (32"x96"/Roof)	$ 800	$1,600	$ 3,200	$ 9,600
Penn Window Cleaning Company (32"x96"/Ground)	$ 1,800	$3,600	$ 7,200	$21,600
Penn Window Cleaning Company (Shingle/Roof)	$ 2,800	$5,600	$11,200	$33,600

Table 5.6 Life Cycle Cleaning Costs

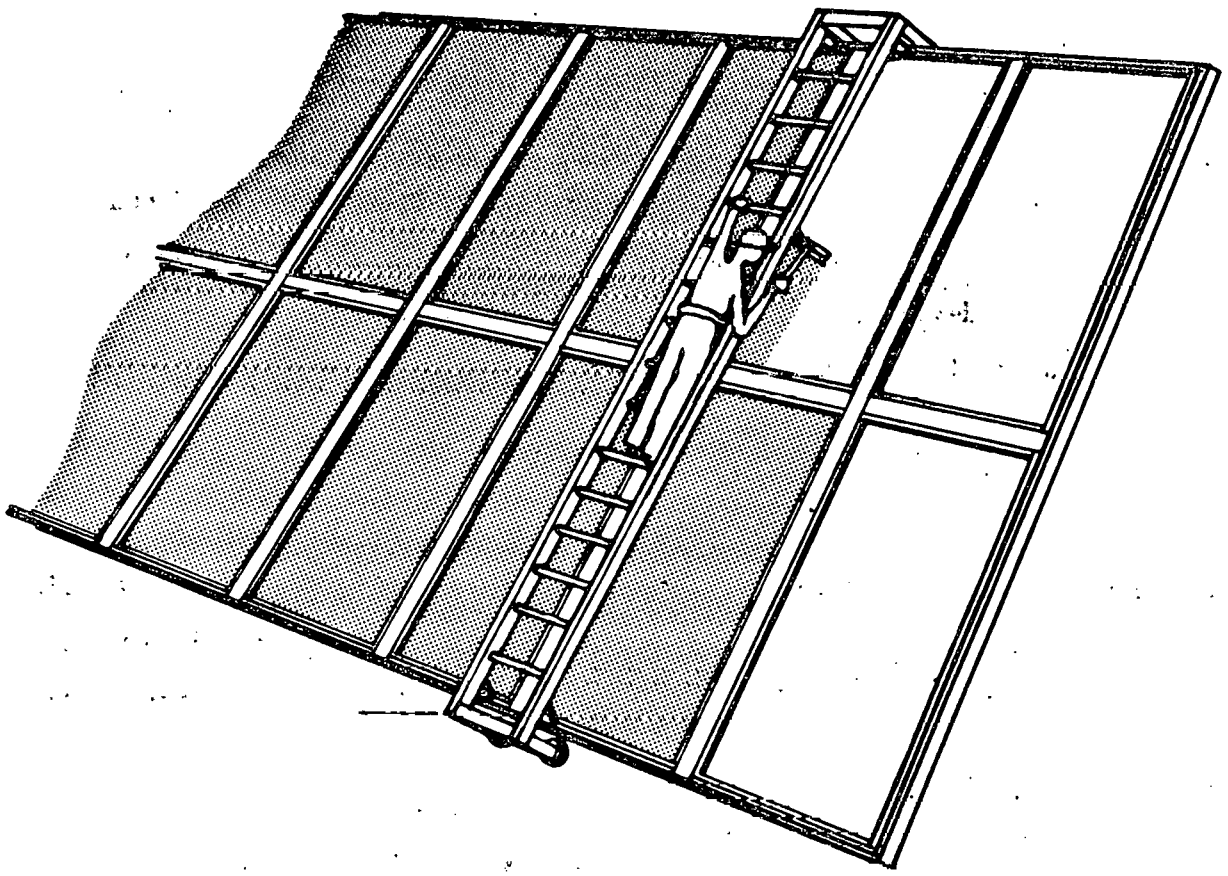

Figure 5.1 Cleaning Operation Using a Rolling Ladder

- Travel

  - Cleaning schedules for photovoltaic arrays do not require specific times for the cleaning operation to occur and could, therefore, tolerate a time variable. A route could be established to reduce transportation and travel costs.

- Frequency

  - Frequency of professional cleaning operations may be reduced by rinsing the array with water from a simple garden hose or a pole device similar to that used in swimming pool cleaning operations altered to accept a garden hose.

5.3 Panel Replacement

Potential problems leading to the replacement of photovoltaic panels are those problems integral to the panel that cannot be rectified on site without further damage to the panel and/or the elements within that panel. These problems could include:

- Cracked, worn or otherwise damaged glazing
- Damaged terminals
- Cracked sills
- Broken interconnects
- General delamination of the composite panel

The origin of these problems is generally not a function of the operation and maintenance of the panels, but can be traced to the design and construction of the panel and its installation.

The procedures necessary for the replacement of a panel can be listed under the following general categories:

- Electrical disconnect
- Removal of fastening devices
- Removal of gasketing materials (watertight membrane system only)
- Removal of panel
- Installation of replacement panel
- Installation of gasketing material
- Installation of fastening devices
- Electrical connection

Few panels require all of the above-mentioned procedures for their replacement and specific details may alter the above sequence. For example, rack mounted arrays do not require gaskets to provide a watertight membrane. Panels which are required to form watertight membrane systems may be designed and supplied with gaskets attached to the panel, or in the case of a shingle/overlap panel, the system provides watertight integrity without gaskets. The electrical disconnection of the panel may follow the panel removal procedure, in which case, the electrical connections would

precede panel installation.

Within the general classifications previously mentioned, each panel design has a specific set of procedures arranged in a sequence unique to that array. Further evaluation of these procedures must, therefore, be detail specific. Using the panel/array details described in section 4.3 replacement procedures and the associated costs can be developed for these specific details.

In order to establish the cost of panel replacement, it was necessary to standardize panel weight, shape and size. The weight limitations were set according to an individual's lifting capacity of 50 to 60 lbs. Actual panel weights based on material weight are listed in Table 5.7. With the exception of the shingle panel, all panels studied were standardized to a rectangular shape 32" x 96". The shingle panel is a hexagonal shape with an area of approximately 1 sq.ft.

Other variables affecting cost, which have not been standardized, include mounting location, mounting type, and mounting method. All of the details shown in Section 4.3 could be ground mounted, however, only detail D (Figure 4.6) has been costed for both roof and ground mounting.

Electrical disconnection and connection varies with the type of connector used. Currently available are two types of quick connectors, Sure Seal Connectors by ITT Cannon, and Scotchlok Self Stripping Connectors by 3M. However, a standard J-Box connection is used by most of the photovoltaic manufacturers to date.

Cost breakdowns for panel replacement are listed in Tables 5.8 to 5.12. The development of these costs required the use of installation costs associated with similar components found in similar mounting

PANEL TYPE		SQ. FT.	32 x 96	32 x 48	16 x 48	16 x 24	48 x 48
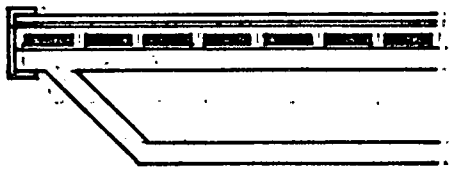	Tedlar	0	0	0	0	0	0
	Cells & Pottant	0	0	0	0	0	0
	GRC*	11	235	118	59	30	176
	Frame		6.2	3.8	3.1	1.9	4.5
*Glass Reinforced Concrete	TOTAL WEIGHT (Pounds)	–	241.2	121.8	62.1	31.9	180.5
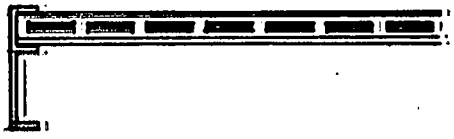	Tedlar	0	0	0	0	0	0
	Cells & Pottant	0	0	0	0	0	0
	1/16" Alum	0.86	18.5	9.2	4.6	2.3	14
	Frame	–	6.2	3.8	3.1	1.9	4.5
	TOTAL WEIGHT (Pounds)	–	24.7	13.0	7.7	4.2	18.5
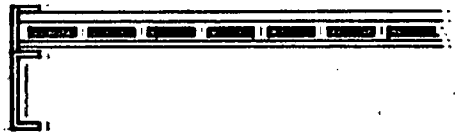	3/32" Annealed Glass	1.25	26.7	13.4	6.7	3.3	20
	Cells & Pottant	0	0	0	0	0	0
	1/16" Alum	0.86	18.5	9.2	4.6	2.3	14.0
	Frame	–	6.2	3.8	3.1	1.9	4.5
	TOTAL WEIGHT (Pounds)		51.4	26.4	14.4	7.5	52.5
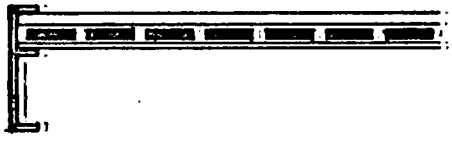	1/8" Tempered Glass	1.67	35.6	17.8	8.9	4.5	26.7
	Cells & Pottant	0	0	0	0	0	0
	1/16" Alum	0.86	18.5	9.2	4.6	2.3	14.0
	Frame	–	6.2	3.8	3.1	1.9	4.5
	TOTAL WEIGHT (Pounds)	–	60.3	30.8	16.6	8.7	45.2
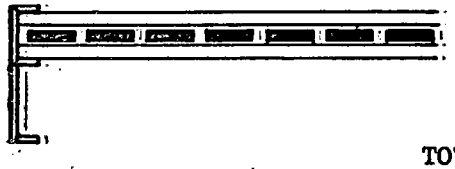	1/8" Tempered Glass	1.67	35.6	17.8	8.9	4.5	26.7
	Cells & Pottant	0	0	0	0	0	0
	1/8" Tempered Glass	1.67	35.6	17.8	8.9	4.5	26.7
	Frame		6.2	3.8	3.1	1.9	4.5
	TOTAL WEIGHT (Pounds)		77.4	39.4	20.9	10.8	57.9

Table 5.7 Panel Weights

LABOR COST

DETAIL	TIME REQUIRED	AVE.COST	OPERATION	COMMENTS
A	180-260 min. 84 sec. (1.4 min.)	$ 85.04 $ 0.26 $ 85.30	Mechanical Replacement of Panel Electrical Connection & Disconnection (Modular Quick Connect)	42 sec + 42 sec = 84 sec x (11.00/hr) Labor Rate See Table 5.23 for electrical connection and disconnection cost breakdowns
B	135-195 min. 84 sec. (1.4 min.)	$ 66.78 $ 0.26 $ 67.04	Mechanical Replacement of Panel Electrical Connection & Disconnection (Modular Quick Connect)	
C-1		$ 83.68	Mech-Elect Replacement of 1st Panel	
C-2		$ 96.96	Mech-Elect Replacement of 2nd Panel	
C-3		$110.24	Mech-Elect Replacement of 3rd Panel	
D Roof	130-190 min. 84 sec. (1.4 min.)	$ 65.12 $ 0.26 $ 65.42	Total panel replacement for roof mounting Electrical Connection & Disconnection Mech-Elect Replacement	
D Ground	100-150 min. 60 sec. (1.4 min.)	$ 53.50 $ 0.18 $ 53.68	Total Mech Replacement for ground mounting Mech-Elect Replacement for ground mounting	Less 40% for ground mounted locations
Shingle	180-250 min. 326 sec. (5.4 min.)	$ 51.43 $ 1.00 $ 52.43	Total shingle Mech replacement for roof mounting Electrical Connection & Disconnection Mech-Elect Replacement for roof	163 sec. x 2 terminals = 326 sec.

Table 5.8 Panel Replacement Costs

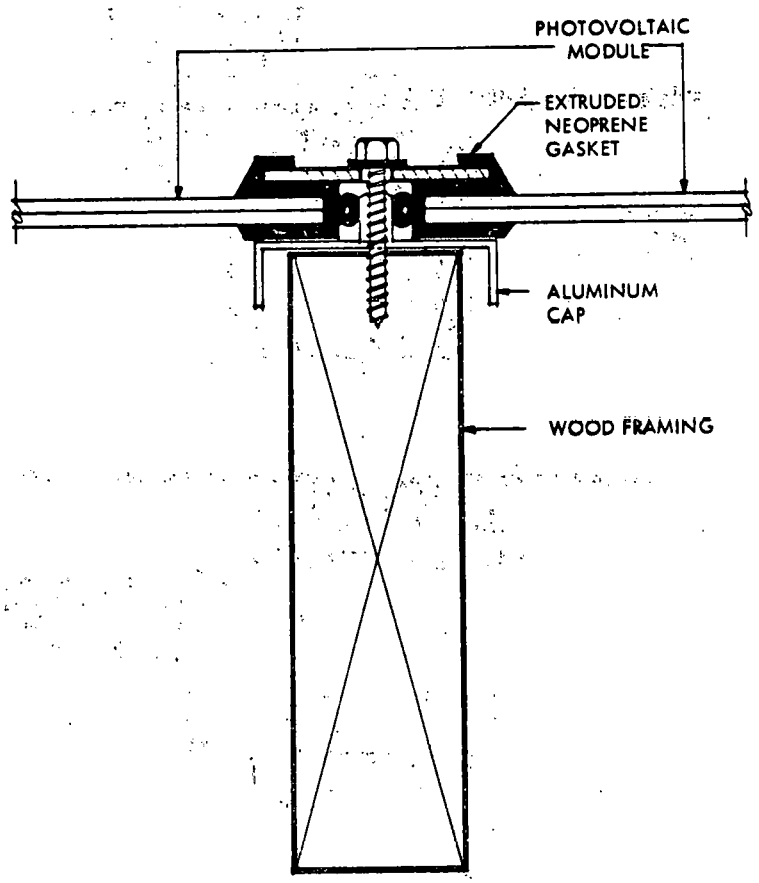

DETAIL A

Figure 5.2

Picture Frame C Gasket Detail

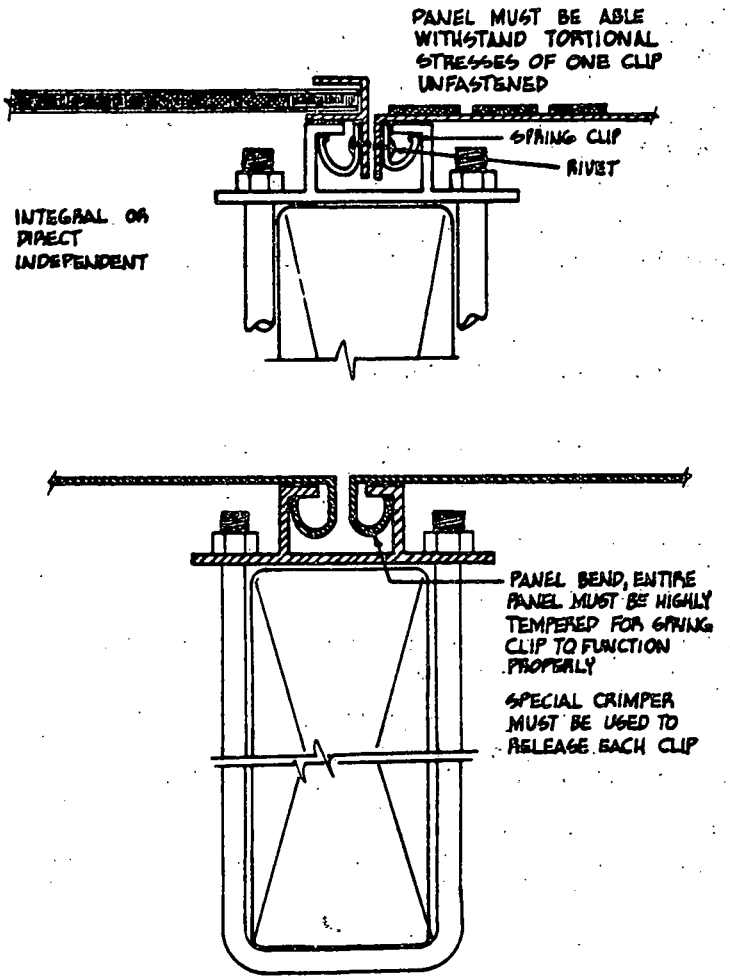

DETAIL B

Figure 5.3

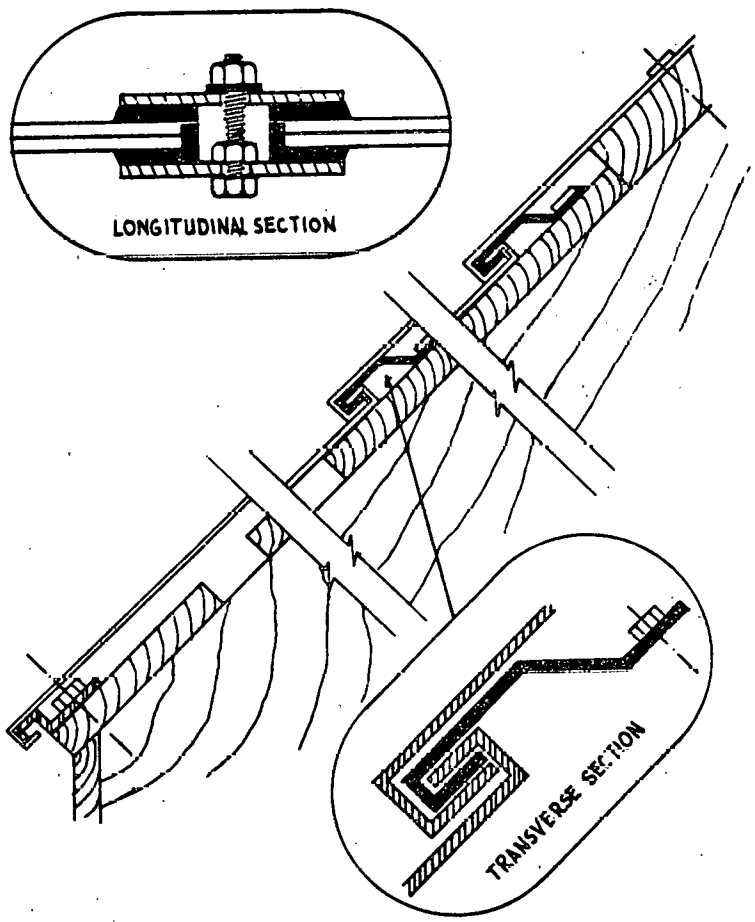

DETAIL C

Figure 5.4

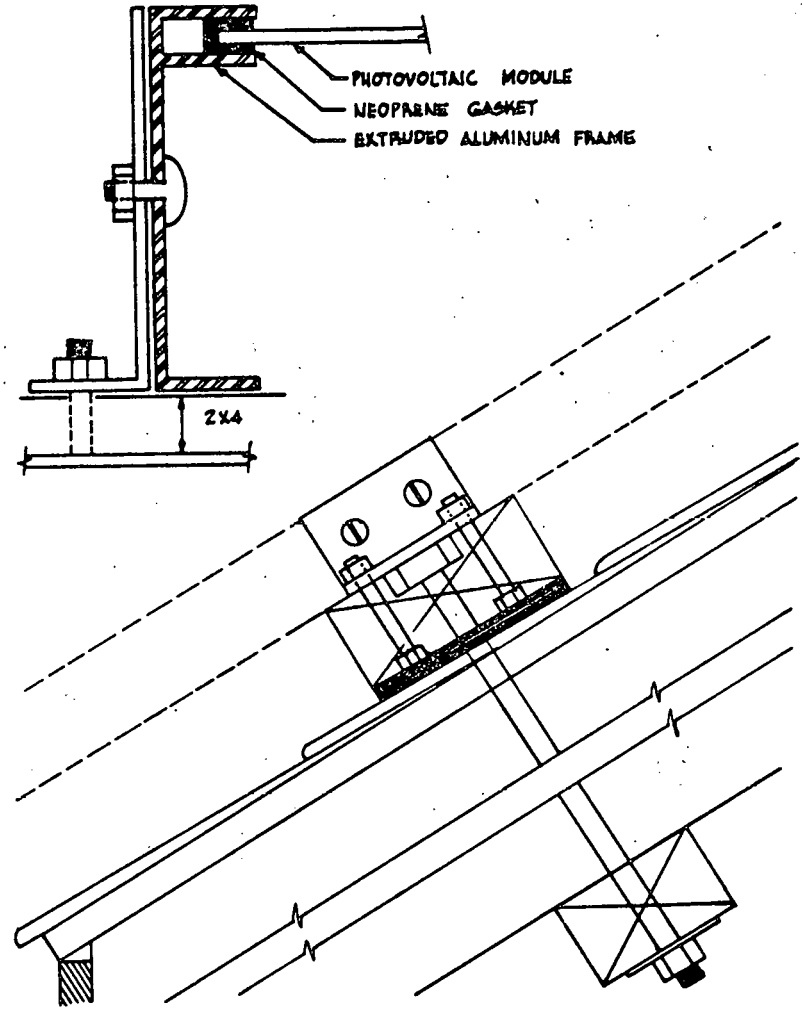

DETAIL D

Figure 5.5

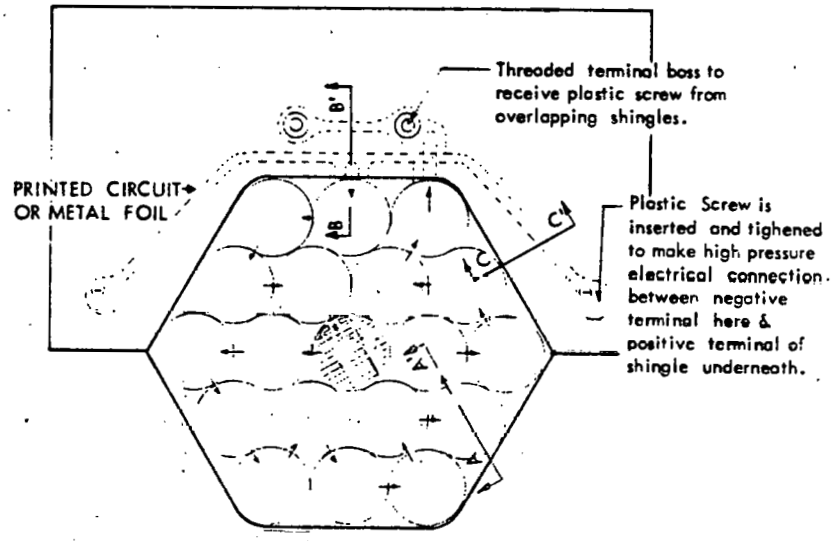

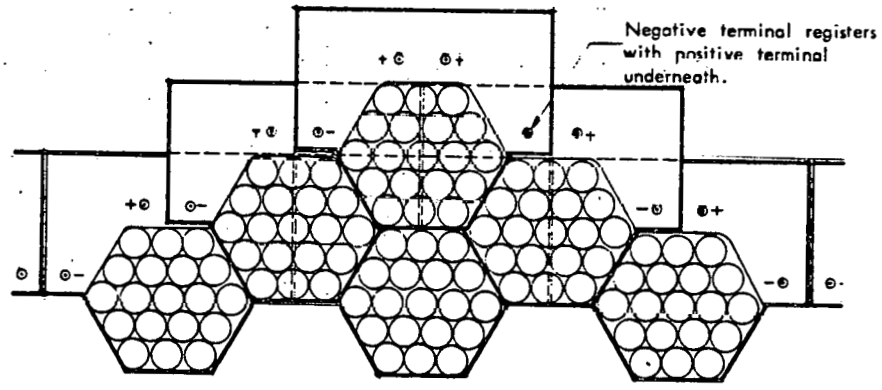

SHINGLE

Figure 5.6

TABLE 5.9

PANEL REPLACEMENT COSTS

LABOR COST

DETAIL	TIME REQUIRED	AVE.COST	OPERATION	COMMENTS
A	25-30 Min.	$ 9.13	Remove 22 1/4"x2" lag screws	Source: Means/Residential Cost Manual
	25-30 Min.	$ 9.13	Reinstall 1/4"x2" lag screws	Source: Means/Residential Cost Manual
	10-20 Min.	$ 4.98	Remove alum. cross members	Estimate
	10-20 Min.	$ 4.98	Reinstall alum. cross members	Estimate
	70-100 Min.	$ 28.22	Replacement excluding site handling & travel	
	60-90 Min.	$ 36.90	Travel/Transportation	$12.00 Trans. $24.90 Travel
	30-40 Min.	$ 11.62	Set Up/Clean Up Time	Estimate
	20-30 Min.	$ 8.30	Site handling of panel for roof mounting	Estimate
	180-260 Min.	$ 85.04	TOTAL PANEL REPLACEMENT FOR ROOF MOUNTING	
B	15-20 Min.	$ 5.81	Release 10 snap clips & panel	Estimate
	10-15 Min.	$ 4.15	Snap new panel into place	Estimate
	25-35 Min.	$ 9.96	Replacement excluding site handling and travel	
	60-90 Min.	$ 36.90	Travel/Transportation	$12.00 Trans. + $24.90 Travel
	30-40 Min.	$ 11.62	Set Up/Clean Up Time	
	20-30 Min.	$ 8.30	Site handling of panel for roof mounting	
	135-195 Min.	$ 66.78	TOTAL PANEL REPLACEMENT FOR ROOF MOUNTING	
C	25-30 Min.	$ 9.13	Remove Fasteners (nails & clips)	Estimate
	20-25 Min.	$ 7.47	Reinstall Fasteners (nails & clips)	Estimate
	15-20 Min.	$ 5.81	Remove Ridge Vent or Flashing	Source: Means/Residential Cost Manual
	10-15 Min.	$ 4.15	Reinstall Ridge Vent or Flashing	Source: Means/Residential Cost Manual
	70-90 Min.	$ 26.56	Replacement excluding site handling & travel	
	60-90 Min.	$ 36.90	Travel/Transportation	$12.00 Trans + $24.90 Travel
	30-40 Min.	$ 11.62	Set Up/Clean Up Time	See Table 5.14
(1 Panel)	20-30 Min.	$ 8.30	Site handling of panel for roof mounting	See Table 5.15
C-1	180-250 Min.	$ 83.38	TOTAL PANEL REPLACEMENT FOR ROOF MOUNTING	Replacement of top panel
	20-25 Min.	$ 7.47	Remove Fasteners (nails & clips)	Estimate
	15-20 Min.	$ 5.81	Reinstall Fasteners (nails & clips)	Estimate
	35-45 Min.	$ 13.28	Remove/Reinstall Each Additional Panel	
	180-250 Min.	$ 83.38	Total panel replacement for 1st panel	See C-1 above
(2 Panel)	35-45 Min.	$ 13.28	Remove/Reinstall 1 Additional Panel	
C-2	215-295 Min.	$ 96.66	TOTAL PANEL REPLACEMENT FOR SECOND PANEL	C-2 = Replacement of second panel
	180-250 Min.	$ 83.38	Total Panel Replacement for First Panel	See C-1 above
(3 Panel)	70-90 Min.	$ 26.56	Remove/Reinstall Two Additional Panels	2 - $13.28
C-3	250-340 Min.	$109.94	TOTAL PANEL REPLACEMENT FOR THIRD PANEL	C-3 = Replacement of third panel

TABLE 5.9 (Cont'd)

PANEL REPLACEMENT COSTS

LABOR COST

DETAIL	TIME REQUIRED	AVE COST	OPERATION	COMMENTS
D (Roof)	10-15 Min.	$ 4.15	Remove 10 Bolt Fasteners	Means 1979 Building Construction Cost Data
	10-15 Min.	$ 4.15	Reinstall 10 Bolt Fasteners	Means 1979 Building Construction Cost Data
	20-30 Min.	$ 8.30	Replacement excluding site handling & travel	
	60-90 Min.	$ 36.90	Travel/Transportation	$12.00 Trans. + $24.90 Travel
	30-40 Min.	$ 11.62	Set Up/Clean Up Time	Estimate
	20-30 Min.	$ 8.30	Site handling of panel for roof mounting	
	130-190 Min.	$ 65.12	TOTAL PANEL REPLACEMENT FOR ROOF MOUNTING	
D (Ground)	10-15 Min.	$ 4.15	Remove 10 Bolt Fasteners	Means 1979 Building Construction Cost Data
	10-15 Min.	$ 4.15	Reinstall 10 Bolt Fasteners	Means 1979 Building Construction Cost Data
	20-30 Min.	$ 8.30	Replacement excluding site handling & Travel	
	60-90 Min.	$ 36.90	Travel/Transportation	$12.00 Trans. + $24.90 Travel
	10-20 Min.	$ 4.98	Set Up/Clean Up Time (Ground)	
	10 Min.	$ 3.32	Site handling of panel for ground mounting	
	100-150 Min.	$ 53.50	TOTAL PANEL REPLACEMENT FOR ROOF MOUNTING	

TABLE 5.10

PANEL REPLACEMENT COST BASE

HOURLY LABOR RATE

QUANTITY	LABOR TYPE	COST/HR	SOURCE	COMMENTS
1	Glazier/Roofer	$ 8.00	Engelsman's 1979 Residential Cost Manual	Due to the simplicity of the connection devices available it was determined that panel replacement would not require an electrician.
1	Laborer (Bldg)	$ 6.50		
2	Crew Cost	$14.50		
	Overhead 37.4%	5.42	Means 1979 Building Construction Cost Data	
2	TOTAL CREW COST	$19.92		

TRANSPORTATION & TRAVEL COST

	TIME REQUIRED	AVE.COST	OPERATION	COMMENTS
	30-45 Min.	$12.45	Travel to site	Hourly
		6.00	Transportation to site	$0.30/mile x 20 miles
		$18.45	Travel/Transportation to site	
	30-45 Min.	$12.45	Travel from site	Hourly
		6.00	Transportation from site	$0.30/mile x 20 miles
		$18.45	Travel/Transportation from site	
	30-45 Min.	$18.45	Travel/Transportation to site	
	30-45 Min.	$18.45	Travel/Transportation from site	
	60-90 Min.	$36.90	TOTAL TRAVEL/TRANSPORTATION/DAY	

SET UP/CLEAN UP

LOCATION	TIME REQUIRED	AVE.COST	OPERATION	COMMENTS
Roof	15-20 min.	$ 5.81	Set Up Ladders & Equipment	Estimate
	15-20 min.	$ 5.81	Clean Up Ladders & Equipment	
	30-40 min.	$11.62	TOTAL ROOF SET UP/CLEAN UP TIME	
Ground	5-10 min.	$ 2.49	Set Up Tools & Equipment	Estimate
	5-10 min.	$ 2.49	Clean Up Tools & Equipment	
	10-20 min.	$ 4.98	TOTAL GROUND SET UP/CLEAN UP TIME	

HANDLING

LOCATION	TIME REQUIRED	AVE.COST	OPERATION	COMMENTS
Roof	10-15 min.	$ 4.15	Remove Module/Panel from Roof	Estimate of handling glazing from roof to truck
	10-15 min	$ 4.15	Raise Module/Panel to Roof	
	20-30 min.	$ 8.30	TOTAL HANDLING OF MODULE/PANEL ON SITE	
Ground	5 min.	$ 1.66	Carry Module/Panel to Truck	Estimate of handling glazing from ground mounted rack to truck
	5 min.	$ 1.66	Carry Module/Panel to Rack	
	10 min.	$ 3.32	TOTAL HANDLING OF MODULE/PANEL ON SITE	

TABLE 5.11

SHINGLE REPLACEMENT COSTS

LABOR COST

DETAIL	TIME REQUIRED	AVE.COST	OPERATION	COMMENTS
Shingle	20-40 Min.	$ 5.50	Remove 4 Shingles	
	20 Min.	$ 3.67	Reinstall 4 Shingles	
	40-60 Min.	$ 9.17	Replace 1 Shingle Excluding Handling & Travel	
	60-90 Min.	$ 25.76	Travel/Transportation	
	50-60 Min.	$ 10.08	Set Up/Clean Up	
	30-40 Min.	$ 6.42	Site Handling of Shingle for Roof Mounting	
	180-250 Min.	$ 51.43	TOTAL SHINGLE REPLACEMENT FOR ROOF MOUNTING	

TABLE 5.12

SHINGLE REPLACEMENT COST BASE

HOURLY LABOR RATE / (One Man Crew)

QUANTITY	LABOR TYPE	COST/HR	SOURCE	COMMENTS
1	Glazier/Roofer	$ 8.00	- Engleman's 1979 Residential Cost Manual	
	Overhead 37.4%	$ 3.00	- Means 1979 Building Construction Cost Data	
1	TOTAL CREW COST	$11.00		

TRANSPORTATION & TRAVEL COST

	TIME REQUIRED	AVE.COST	OPERATION	COMMENTS
	30-45 Min.	$ 6.88	Travel to site	
		$ 6.00	Transportation to site	
	30-45 Min.	$12.88	Travel/Transportation to site	
	30-45 Min.	$ 6.88	Travel from site	
		$ 6.00	Transportation from site	
	30-45 Min.	$12.88	Travel/Transportation from site	
	30-45 Min.	$12.88	Travel/Transportation to site	
	30-45 Min.	$12.88	Travel/Transportation from site	
	60-90 Min.	$25.76	TOTAL TRAVEL?TRANSPORTATION	

SET UP/CLEAN UP (One Man Crew)

LOCATION	TIME REQUIRED	AVE.COST	OPERATION	COMMENTS
Roof	25-30 min.	$ 5.04	Set Up Ladders & Equipment	ESTIMATE:
	25-30 min.	$ 5.04	Clean Up Ladders & Equipment	
	50-60 min.	$10.08	TOTAL ROOF SET UP/CLEAN UP TIME	
Ground	10-15 min.	$ 2.30	Set Up Tools & Equipment	ESTIMATE:
	10-15 min.	$ 2.30	Clean Up Tools & Equipment	
	20-30 min.	$ 4.60	TOTAL GROUND SET UP/CLEAN UP TIME	

HANDLING

LOCATION	TIME REQUIRED	AVE.COST	OPERATION	COMMENTS
Roof	15-20 min.	$ 3.21	Remove Module/Panel from Roof	Estimate of handling a 32"x96" sheet of glass from roof to truck.
	15-20 min	$ 3.21	Raise Module/Panel to Roof	
	30-40 min.	$ 6.42	TOTAL HANDLING OF MODULE/PANEL ON SITE	
Ground	5 min.	$ 0.92	Carry Module/Panel to Truck	Estimate of handling a 32"x96" sheet of glass from ground mounted rack to truck.
	5 min.	$ 0.92	Carry Module/Panel to Rack	
	10 min.	$ 1.84	TOTAL HANDLING OF MODULE/PANEL ON SITE	

configurations. An example, would be a standard sloped glazing system which compares to a integrally mounted photovoltaic panel. The time required to perform the necessary tasks was determined and the average cost is, then, a product of the mean time required and the total hourly crew cost of the labor type performing the task.

Hourly crew costs were obtained from Engeslman's, "1979 Residential Cost Manual." Overhead figures were obtained from Means, "1979 Building Construction Manual" and added to the hourly crew costs to produce the total labor costs. In all cases the average cost of an operation is the produce of the mean time required to perform that operation and the total hourly crew cost.

Travel time and costs for transportation remain constant regardless of panel variables. The time required to travel to and from the site was estimated for a distance of 20 miles. A mileage rate of $0.30 per mile was used. The total travel cost also includes hourly crew costs. Setup/ cleanup costs and handling costs vary with the mounting type, location and crew size.

Cost drivers/methods of cost reduction

- Weight
  - Reducing the weight of the panel will increase the ease of handling.
- Size and Shape
  - Optimize the size and shape of the panel, remembering this application is for residential job sites and special requirements exist.

- Fastening Devices

  - Fastening devices should be designed to be removed quickly and easily, thus reducing the time and cost of replacement.

- Gasketing/Framing

  - Attach the gasketing to the frame or to the panel in order to reduce the number of pieces removed and reinstalled during the replacement operation.

  - Design gasketing and framing in modular units requiring as little disturbance of other panels as possible during the replacement of a panel.

- Accessibility of Array

  - Mounting of the array on the ground allows easy accessibility for maintenance purposes.

  - For roof locations, provide a ladder supported over the face of the array that can be easily moved across the array while loaded, similar to the rolling ladders in bookstores and libraries.

  - Provide footholds or a ledge between horizontal rows of panels.

- Frequency of replacement

  - Design parts of the panel which must remain integral to the panel such that they will perform their functions for the design life of the panel.

- Design those parts of the panel which may degrade rapidly such that they may be removed without the removal of the entire panel.

- Mounting Technique

  - Mount panels as independently as possible to reduce the disturbance of surrounding panels in a replacement operation.

  - Avoid sequential mounted panels. Their requirement to disrupt or remove other panels during a replacement procedure increases the risk of damaging surrounding panels.

5.4 Gasket Replacement

Gasketing, for the purpose of this study, will be limited in definition to any ring or continuous strip of resilient material joining the panels of an array in such a way that a watertight seal between panels is created. Problems which require the replacement of gasketing include; physical deterioration of the material due to airborne pollutants and/or due to thermal cycling, mechanical separation of the gasket resulting from inadequately designed or installed fastening devices, and localized damage caused by vandals or vermin.

The need for gasketing will vary with mounting type, panelized construction type and with the specific detail used. Rack and standoff mounted arrays require no panel to panel gasketing, as a watertight membrane is not required. Shingle/overlap panels provide a watertight membrane but require no gasketing. However, direct and integral mountings require the use of panel to panel gasketing to form waterproof seal.

The procedures for the replacement of damaged gasketing will also vary with

the type of gasket detail used. Two generic gasket types have been identified: Tape strip and picture frame C gaskets. Detail A. in Figure 5.7 is an example of a picture frame C gasket. The procedures necessary for replacing such a gasket involve all the operations necessary for panel replacement, and the additional operation required for the removing of the gasket from the frame and installing a replacement. A slight modification of this detail is seen in Figure 5.8, Detail A., and is an example of a structural H gasket. The replacement of such a gasket requires the same procedures as mentioned above.

Detail B., as shown in Figure 5.9, is an example of a tape strip gasket. The strip gasket occurs in the transverse section of the panel. The procedure for replacing the gasket includes removing the bolts fastening the cross members, removing damaged gasket (top only), installing new gasket in its place, and reinstalling the cross members.

The labor costs for gasket replacement were developed using the same methods as developed for labor costs for panel replacement. A summary of these costs and time required to complete the operations is given in Table 5.13.

Cost Drivers/Methods of Cost Reduction

- Degradation of materials
  - Exposed gasketing material should be designed to withstand all expected environmental conditions over the life of the system.
- Array Accessibility
  - The mounting of the array on the ground allows for easy accessibility for maintenance purposes.

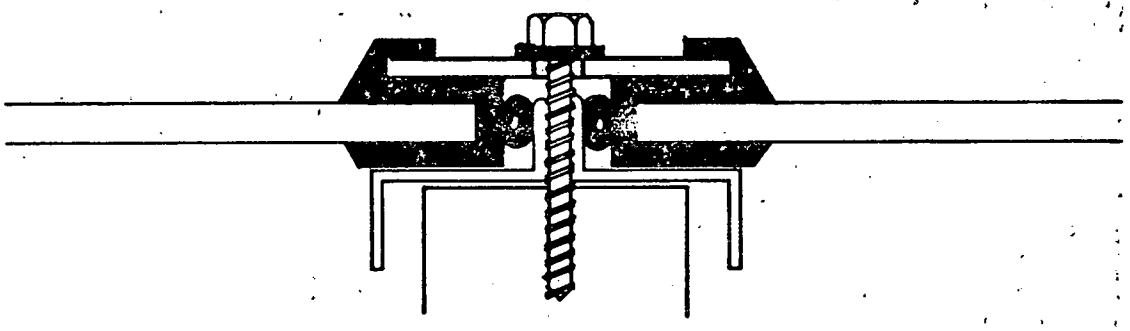

DETAIL Aa

Figure 5.7

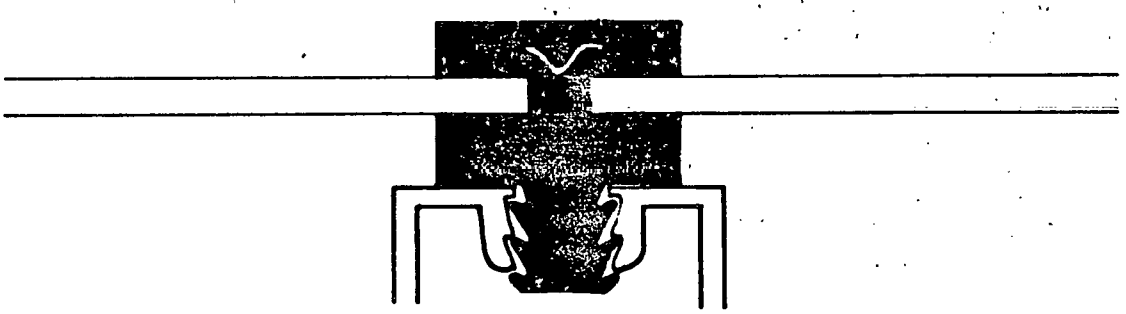

DETAIL Ab

Figure 5.8

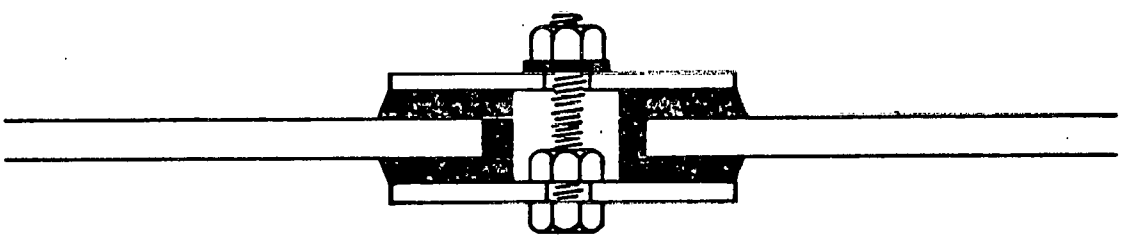

DETAIL Bc

Figure 5.9 Gasket Details

LABOR COST

DETAIL	TIME REQUIRED	AVE.COST	OPERATION	COMMENTS
A	25-30 Min.	$ 9.13	Remove 22 1/4"x2" lag screws	Source: Means 1979 Building Cost Data
	25-30 Min.	$ 9.13	Reinstall 1/4"x2" lag screws	Source: Means 1979 Building Cost Data
	10-20 Min.	$ 4.98	Remove alum. cross members	Estimate
	10-20 Min.	$ 4.98	Reinstall alum. cross members	Estimate
	70-100 Min.	$28.22	Replacement excluding site handling & travel	
	60-90 Min.	$36.90	Travel/Transportation	$12.00 Trans. $24.90 Travel
	30-40 Min.	$11.62	Set Up/Clean Up Time	Estimate
	20-30 Min.	$ 8.30	Site handling of panel for roof mounting	Estimate
	180-260 Min.	$85.04	Total panel replacement for roof mounting	
	5-10 Min.	$ 2.49	Remove damaged/weathered gasket	Estimate
	5-10 Min.	$ 2.49	Install new gasket	Estimate
	190-280 Min.	$90.02	TOTAL GASKET REPLACEMENT	
B	0	$ 0.00	No gasket involved	
C	15-25 Min.	$ 6.64	Remove 10 bolts	Source: Means 1979 Building Cost Data
	10-20 Min.	$ 2.49	Remove aluminum cross members	Estimate
	5-10 Min.	$ 2.49	Removed damaged/weathered gasket (top only)	Estimate
	5-10 Min.	$ 2.49	Install new gasket (top only)	Estimate
	10-20 Min.	$ 4.98	Install aluminum cross members	Estimate
	15-20 Min.	$ 6.64	Install 10 bolts	Source: Means 1979 Building Cost Data
	60-105 Min.	$28.22	Gasket replacement excl. Travel/Site Prep.	
	60-90 Min.	$36.90	Travel/Transportation	$12.00 Trans. $24.90 Travel
	30-40 Min.	$11.62	Set Up/Clean Up Time	Estimate
	150-235 Min.	$76.74	TOTAL GASKET REPLACEMENT	
D	0	$ 0.00	No Gasket involved	
Shingle	0	$ 0.00	No gasket involved	

Table 5.13 Gasket Replacement

- For roof locations, provide a ladder supported over the face of the array that can be easily moved across the array while loaded, similar to the rolling ladders in bookstores and libraries.

- Provide foothold or ledge between horizontal rows of panels to be used as a catwalk.

- Accessibility and Need for Removal of Gaskets

  - Locate gaskets as near the front surface of the array as possible

  - Locate electrical terminals beneath the gasket or under the panel so as not to require their removal during gasket replacement operations.

  - Detail panel connections to provide a void between panels in order to accommodate gasket replacement without panel removal.

5.5 Wiring Repair and Replacement

Wiring should be designed of such a quality that normal operation of the photovoltaic array in any climate should not degrade the wiring in any manner. Insulation and conductors, therefore, should be designed to function for the life of the array. Occasionally, however, factors beyond the control of the designer may damage the wiring; such factors include vandals, vermin and unusual environmental conditions. It is possible for a vandal to cut insulation on wiring or even shear wiring with a knife or pair of wire cutters, and risk receiving an electrical shock that could be fatal. In such a case, the owner may be held legally responsible for the vandal's death or injuries. Vermin could gnaw insulation of a wire or even severe a wire completely, in which case the animal may also receive a fatal

shock. Extreme environmental conditions which could damage wiring include thermal cycling, high winds, and airborne pollutants such as ozone.

Regardless of the cause, wiring degradation occurs on three levels - universal degradation of insulation, localized shearing of conductors and insulation, and localized insulation failure. Universal degradation of insulation requires replacement of the length of wire involved. Procedures for wire replacement require the removal of the wire from the terminal contacts at each end, removing the wire from its location, relocating a new wire, and connecting the ends of the new wire to the terminal connectors. Localized shearing can be repaired either by replacing the wire or by reconnecting the wire with a modular quick connect terminal or by splicing. Localized insulation failure can be repaired by any of the repair procedures previously mentioned but may simply require a wraparound device capable of insulating the conductor.

The ease of performing the above mentioned procedures is dependent upon the mounting type, the location of the wiring with respect to the panel, and the location of the array, be it ground or roof mounted. The replacement operations for exposed wiring may be accomplished with little difficulty. Wiring located within a cable bus requires the additional operation of removing a cover or access panel before proceeding with the wiring replacement procedure. Defective wiring within a conduit must be removed from the conduit before repairs can commence. Wiring located beneath panels may require the removal of one or more panels for wiring repair unless some other means of access is provided.

Wiring repair and replacement costs have been generated for #14, #12 and #10 AWG, three-wire non-metallic sheathed cables (NM) in dry locations and three-wire underground feeder cable (UF) in wet locations. Wire replacement costs studied have been limited to those wires attached

directly to or between panels; replacement of wiring beyond this point is dependent upon system parameters and, therefore, becomes a system problem. However, localized damage to system wiring - sheathing, insulation, and/or conductors - may be repaired by the methods previously stated.

Labor costs for wiring repair and replacement, costs associated with travel, and setup/cleanup costs were based on a one-man crew. The crew costs were developed from the average hourly wage of an electrician given in Engelsman's, "1979 Residential Cost Manual." A percentage for overhead was taken from Means, "1979 Building Construction Cost Data File", and added to the crew cost to achieve the total crew labor cost. The transportation costs of $0.30 per mile and an allotted distance of 20 miles produced an average transportation cost of $6 to the site and $6 from the site, totalling $12. All other costs were determined using time estimates for the replacement operation. The time estimates and costs to perform the required tasks can be seen in Tables 5.14 - 5.16.

Cost estimates for the installation of modular quick connects were not obtainable in any of the cost estimating manuals. Therefore, time studies for replacing a wire in a Sure Seal Connector were performed with the assistance of an ITT Cannon representative. The operation sequence includes shearing a wire in two, stripping the conductor wires, crimping the male and female contacts onto the conductor and inserting the wire into the quick connect housing. The operation was completed using hand tools equivalent to those which would be used in the field, but the study was conducted in a factory. To compensate, 20% was added for the sloped condition and another 20% was added for the difference in height bringing the total compensation to a 140% for a roof mounted array.

Cost Drivers/Methods of Cost Reduction

- Accessibility to the Wiring System

  - Ground mounted arrays are more easily accessible for maintenance purposes.

  - Locate wiring in such a position that it is easily accessible without removing photovoltaic panels or cover plates of raceways or without removing the wiring from the conduit.

  - Mounting arrays on a rack and wiring beneath the panel provides easy accessibility.

  - For rooftop locations, provide a ladder that can be easily moved across the array while loaded, similar to the rolling ladders used in bookstores and libraries.

  - Eliminate wiring by integrating the terminal connector into the mechanical connection devices.

- Lack of Repairability by Owner

  - Simplify electrical connections to plug in/out type so that repairs could be made by "unplugging" damaged sections and "plugging in" the replacement.

NOTE: Cost and time involved for wiring repair and replacement are minimal. However, transportation, travel and setup/cleanup time are comparatively high. If simplified repair procedures could be accomplished by the owner or caretaker of the system a large portion of the wiring repair costs could be eliminated.

5.6 Termination Repair

Terminals should be designed to withstand normal operating stresses, and sealed in to prevent corrosion or oxidation of metal contacts. Wiring should be secured in the terminal housing to provide reasonable resistance to dislocation of the contacts. In the event that operating stresses exceed the design limits and/or seals are broken, terminals may require repair or replacement. Damage to terminals could result from mishandling during installation, improper installation, carelessness during maintenance or replacement operations, vandalism, vermin and unusual environmental conditions. Causes for damaged terminals are dependent on terminal type, design and location. Three terminal types have been identified as candidates for the electrical interconnects of photovoltaic panels: J-Box, modular quick connectors, and stud connectors. (See Figures 5.10, 5.11 and 5.12.

Two major factors, accessibility and repairability, dictate the procedures used for the repair or replacement of terminals. Terminals integral to and mounted beneath panels require the removal of the panel in order to gain access to a damaged terminal unless some other means of access is provided. Terminals located within a J-Box or under a covering along the side of the panel require only the removal of a cover panel for access to the terminals. J-Boxes normally protrude from the side or the back surface of a panel. During installation and replacement operations, such a protrusion could be accidentally sheared at the connection points to the panel. However, such locations provide a measure or protection against carelessness during maintenance operations, vandalism and vermin due to the limited accessibility to the terminals. The back surface location of the J-Box also provides protection from most environmental conditions with the exception of pollutants in the atmosphere which may cause gasket deterioration and/or contact corrosion.

CONSTRUCTION FEATURES

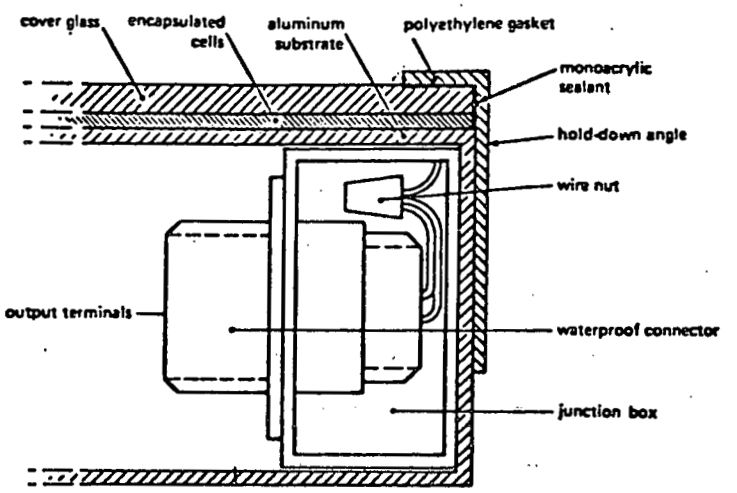

Figure 5.10 J-Box Mounting on Panel Back

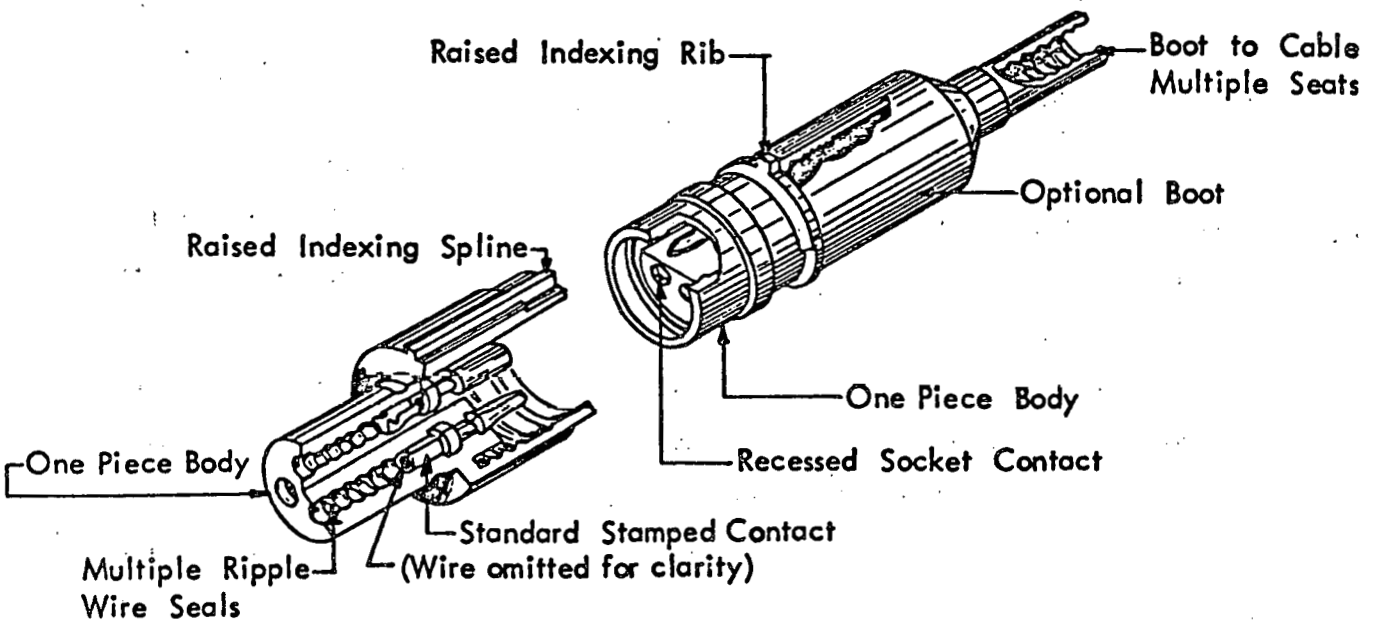

Figure 5.11 Modular Quick Connect

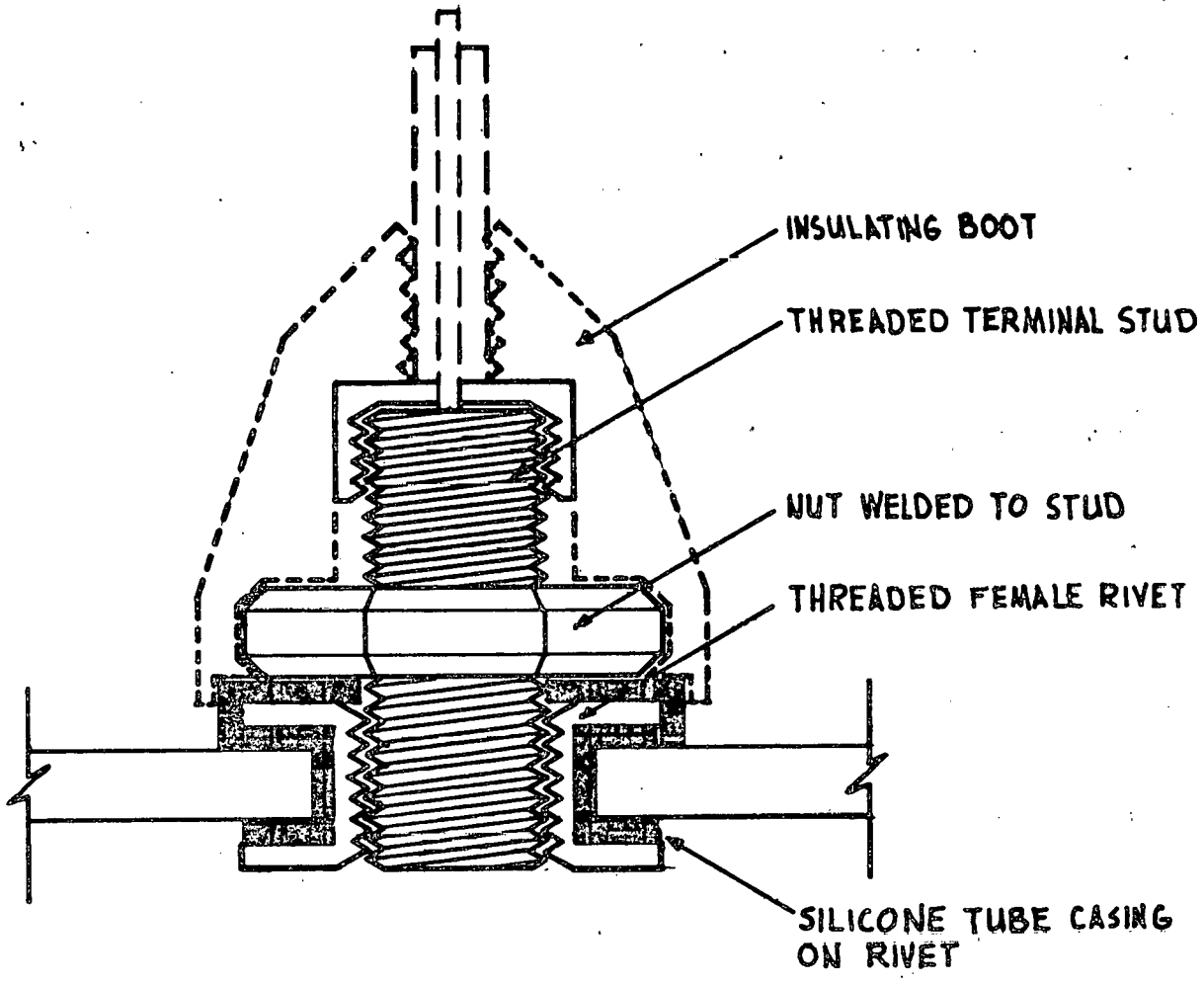

STUD TERMINAL

Figure 5.12 Stud Terminal Connection

Procedures specific to the repairing of a J-Box vary with the nature of the problem requiring corrective actions and the location of each J-Box. Damaged cover seals require the removal of the cover plate, removal of the seal, installation of a new seal and the installation of the rebuilt or new cover plate. Additional tasks may be required in the event that internal damage has taken place as a result of damaged cover plate. Corrosion of contacts within the J-Box requires the removal of the cover plate, spray cleaning of the contacts with a non-conductive spray cleaner, and reinstallation of the cover plate. Reattaching wires within a J-Box requires the removal of the cover plate, the removal of wire nuts connecting the wires, removal of the cable connector, clamping the cable connector to secure the cable, stripping insulation from the conductors, twisting wire nuts onto wire pairs, and the reinstallation of the cover plate. A J-Box sheared cleanly from the panel without damage to the box or panel may require the removal of the cover plate to gain access to the fastening devices to secure the J-Box to the panel. It is important to note, that with all maintenance procedures requiring access to wiring extreme caution should be taken to avoid the potential of shock hazards.

A summary of the costs for the associated J-Box maintenance operations is given in Table 5.14

The proposed design for modular quick connectors, locate this terminal type at the end of a wire protruding from the front, side, or back of a photovoltaic panel. See Figure 5.13. During installation and replacement operations, conductor terminations could be accidentally dislodged from the boot which shields the conductor. Locating the terminal on the back or side of the panel limits accessibility to the terminal, but affords protection from careless maintenance men, vandals and vermin. Terminals located on the face of the panel or those mounted on the side, which are exposed to weathering, may experience deterioration of contacts due to

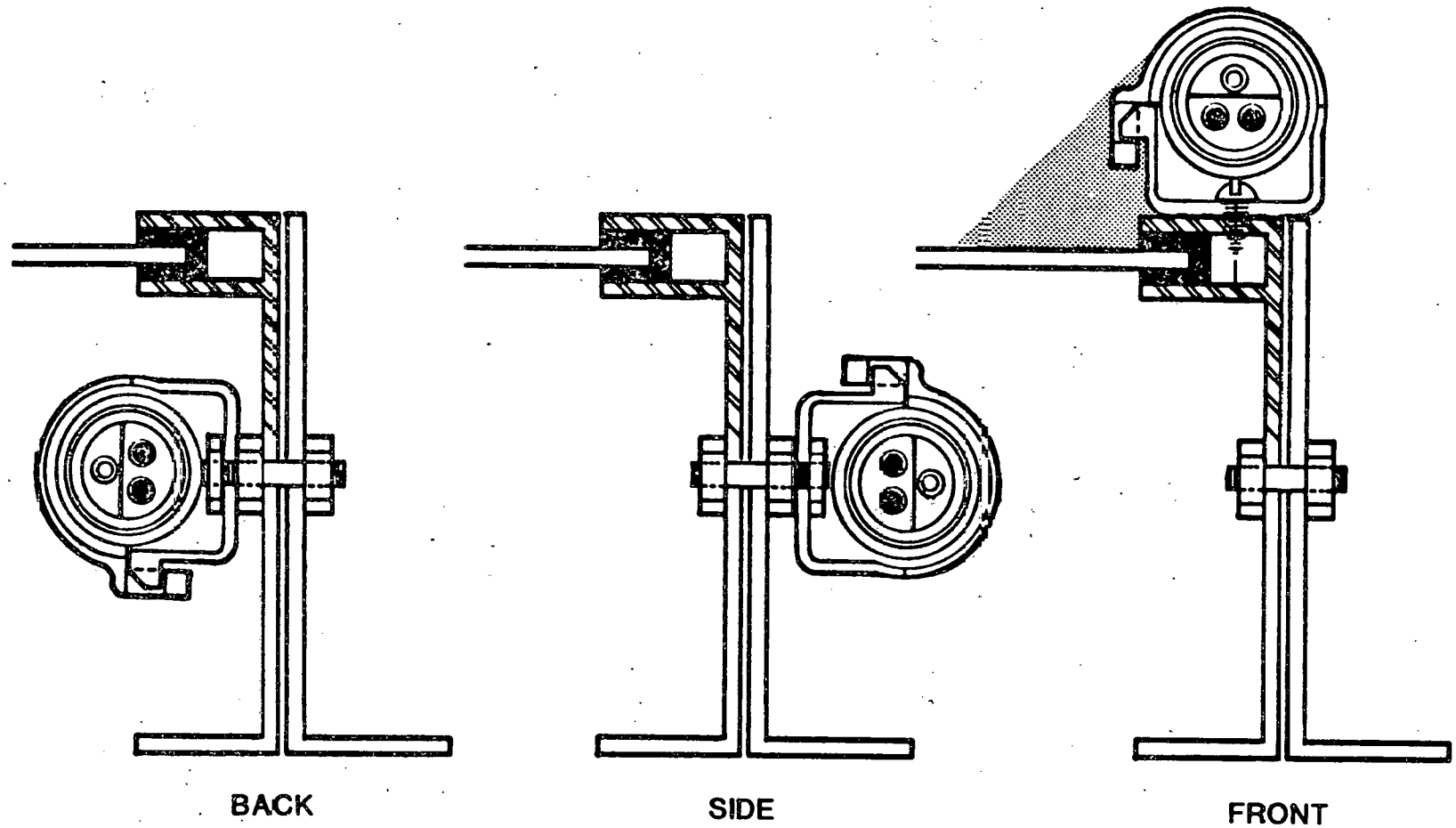

Figure 5.13

Quick Connect Terminal Locations

corrosion, and material degradation if the proper materials are not used and proper protection is not afforded.

The procedures specific to the repair and replacement of modular quick connectors will vary with the type used. The connector investigated in this study was the ITT Cannon Sure Seal Connector. Dislodged conductor terminations simply require reinsertion, with the aid of a simple hand tool, into the boot. A damaged boot covering the contacts requires the conductor terminations to be removed from the damaged boot and inserted into a replacement boot. Complete destruction of a quick connect requires the damaged conductor terminations to be removed from damaged boot snipping the damaged conductor termination from the conductor, stripping the insulation from the conductors, crimping new contacts to the conductors, and inserting the conductor terminations into a new boot.

A summary of costs for quick connect terminals is seen in Figure 5.15.

Two sub-categories of terminals exist for stud-type terminals. The first, utilizes an intermediate wire to electrically connect the panels. The second, connects the terminals directly to one another. During installation and replacement procedures, studs protruding from the panels could easily be bent, sheared in two, or have threads damaged if panels are mishandled. Protruding terminals must be protected from corrosion and from short circuiting.

Repair procedures for stud terminals vary with the sub-category, the method by which the stud is attached to the panel, and the accessibility of that stud for maintenance purposes. Studs integral to the panel with no designed means of detachment, require panel replacement if the studs are damaged. Detachable studs studied are of two varieties; the first is screwed into a threaded female connection permanently attached to the panel, while the second is snapped into a female connection also

LABOR COST

WIRE #	TIME REQUIRED	AVE.COST	OPERATION	COMMENTS
J-Box Dry #14	9 Min.	$ 1.72	Remove Cover Plate (Dry)	Means 1979 Building Construction Cost Data
	2.6 Min.	$ 0.48	Remove Wire Nuts & Uncouple Wires	Means 1979
	3.7 Min.	$ 0.70	Remove Cable Connector & Wire.	Means 1979
	3.7 Min.	$ 0.70	Remove Cable Connector & Wire	Means 1979
	3.1 Min.	$ 0.58	Strip 6 Wires, Twist 3 Wire Pairs, Attach 3 Wire Nuts	Means 1979
	9 Min.	$ 1.72	Install cover 4-11/16, blank (Dry)	Means 1979
#14	31.1 Min.	$ 5.90	Total Rewiring of box for #14 NM Wire (Dry)	
		$ 0.94	Add 16% for #12 Wire	Means 1979
#12		$ 6.84	Total Rewiring of box for #12 NM Wire (Dry)	
		$ 5.90	Total Rewiring of box for #14 NM Wire (Dry)	
		$ 1.89	Add 32% for #10 Wire	Means 1979
#10		$ 7.79	Total Rewiring of Box for #10 NM Wire	
			Add 20% for Wet Locations	Installation of Wet Box & Cover ÷ Installation of Dry Box & Cover = 120% or 20% Additional Cost
#14		$ 7.08	Total Rewiring of Box for #14 NM Wire (Wet)	$5.90 x 120%
#12		$ 8.21	Total Rewiring of Box for #12 NM Wire (Wet)	$6.84 x 120%
#10		$ 9.35	Total Rewiring of Box for #10 NM Wire (Wet)	$7.79 x 120%

Table 5.14

LABOR COST (Wiring)

WIRE #	TIME REQUIRED	AVE.COST	OPERATION	COMMENTS
	15 Seconds	$ 0.05	Strip conductor, crimp contact onto conductor	5 Sec. x 3 conductors = 15 sec.
	34 Seconds 49	$ 0.11 $ 0.16	With hand tool, and insert conductor/contact assembly into quick connect terminal housing	Quoted time study from a conversation with Dan Hulse of ITT Cannon
	20 Seconds 414 Seconds	$ 0.06 $ 1.31	40% addition for roof mounted locations. Total installed quick connection roof wiring	Estimate (69 seconds x 6 conductors) = 414
	30 Seconds	$ 0.10	Attach quick connect & snap into position	Estimate from in-house time study estimate
	12 Seconds	$ 0.4	Add 40% for roof mounted locations	Estimate
	42 Seconds (0.7 min.)	$ 0.14	Total attach male & female quick connects and snap into position on a roof.	
#14	456 Seconds (6 Min.)	$ 1.45	Attach 2 quick connects to wires and marry male to female quick connect.	(414 seconds + 42 seconds) = 456
		$ 0.23	Add 16% for #12 Wires	
#12		$ 1.68	Total Quick Connect Wiring for #12 Wires	
		$ 0.47	Add 32% for #10 Wire	
#10		$ 1.92	Total Quick Connect Wiring for #10 Wires	

Table 5.15

(Wiring) HOURLY LABOR RATE

QUANTITY	LABOR TYPE	COST/HR	SOURCE	COMMENTS
1	Electricial	$ 8.75	Engelsman's 1979 Residential Cost Manual	
	Overhead 30.2%	$ 2.65	Means 1979 Building Construction Cost Data	
	TOTAL	$11.40		

TRANSPORTATION & TRAVEL COST

	TIME REQUIRED	AVE.COST	OPERATION	COMMENTS
	30-45 Min.	$ 7.13	Travel to site	Hourly
		$ 6.00	Transportation to site	$0.30/Mile x 20 Miles
	30-45 Min.	$13.13	Travel/Transportation to Site	
	30-45 Min.	$ 7.13	Travel from site	Hourly
		6.00	Transportation from site	$0.30/mile x 20 Miles
	30-45 Min.	$13.13	Travel/Transportation from site	
	30-45 Min.	$13.13	Travel/Transportation to site	
	30-45 Min.	$13.13	Travel/Transportation from site	
		$26.26	TOTAL TRAVEL/TRANSPORTATION	

(Wiring) SET UP/CLEAN UP

LOCATION	TIME REQUIRED	AVE.COST	OPERATION	COMMENTS
ROOF	15-20 Min.	$ 5.81	Set up ladders & equipment	Estimate:
	15-20 Min.	$ 5.81	Clean up ladders & equipment	
	30-40 Min.	$11.62	TOTAL ROOF SET UP/CLEAN UP	
GROUND	5-10 Min.	$ 2.49	Set up tools & equipment	Estimate:
	5-10 Min.	$ 2.49	Clean up tools & equipment	
		$ 4.98	TOTAL GROUND SET UP/CLEAN UP TIME	

Table 5.16

permanently attached to the panel. Procedures for replacing a threaded screw-in stud require unscrewing the stud and screwing a new stud terminal in its place. Replacing a snap-in stud requires unsnapping the damaged stud and snapping a new stud into its place.

Cost Drivers/Methods of Cost Reduction

- Accessibility to Panel

  - Ground mounted arrays are more accessible for maintenance purposes.

  - For roof locations, provide ladder on the roof that can be easily moved across the array while loaded, similar to the rolling ladders used in bookstores and libraries.

  - Provide a foothold or ledge between horizontal rows of panels to be used as a catwalk.

- Accessibility of Terminals

  - Mount terminals on the face of the panel of a direct, stand-off or integrally mounted array unless some other means of access is provided.

  - On rack or integrally mounted arrays locate terminals on the back of the panels and provide access to these terminals.

- Lack of Repairability by Owner

  - Simplify electrical connections so that an owner or groundskeeper could repair terminal damage by unplugging the damaged terminal and replacing it with a new terminal. (NOTE: This would eliminate expensive travel, transportation, and setup/cleanup time and thus reduce termination repair costs.) Care must be taken to insure the safety of the repairperson.

- Lack of Multi-Function Terminals

  - Terminals designed to perform multi-functions, such as electrical interconnection and mechanical fastening, could be developed. Figure 5.14 is an example of such a device for shingle type modules.

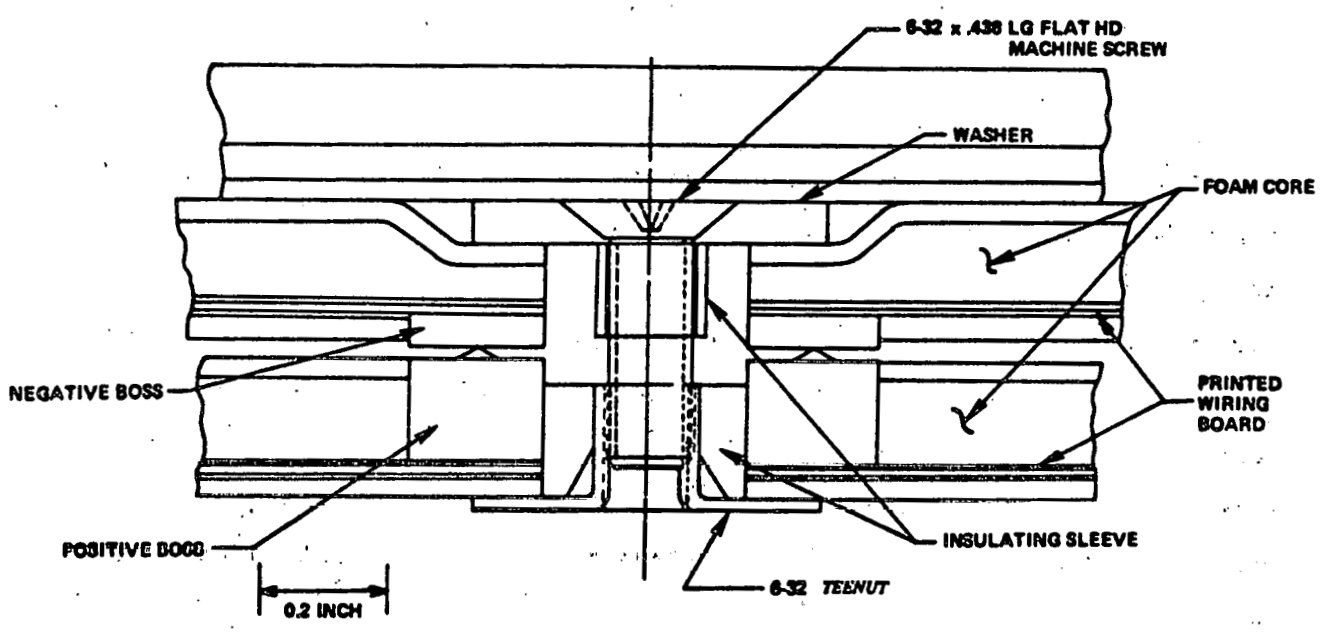

Figure 5.14 Mechanical/Electrical Fastening of Shingles

SECTION 6

REPAIR/REPLACEMENT STRATEGY

This section of the final report will describe several potential repair/replacement scenarios which may take place over the life of a photovoltaic array. In an attempt to identify the desirability or lack of desirability for certain maintenance operations, several costing studies have been performed for each scenario. Cost data was developed for each of four scenarios based upon a system design life of twenty years. A discount factor of zero was approved by JPL for use in establishing life cycle cost data for the operation and maintenance scenarios associated with residential photovoltaic systems.

Four basic scenarios are described. The three basic environmental conditions - of urban, suburban, and rural environments are examined for operation and maintenance costs. Each of these scenarios will include the investigation of standard 32" x 96" panels and photovoltaic shingles. The last scenario will investigate a catastrophic failure of a portion of the array and the considerable cost differences associated with panels versus shingle installations.

Scenario 1.

For the purpose of the first scenario, the photovoltaic array is located in an urban environment (one in which heavy airborn pollutants are present) with an expected system life of 20 years. In this harsh environment, assume the array requires cleaning twice a year and the panel framing requires coating (painting) once every three years. Also, five 32" x 96" panels require replacement throughout the 20 year period. For comparison purposes, a shingle array consisting of 600 photovoltaic shingles which require cleaning twice a year, do not require painting, and require the replacement of 50 shingles (replaced at one time) during the life of the array.

Based on these assumptions, the following costs for maintenance operations will be incurred:

	Panel	Shingle
• Panel/shingle replacement	$ 427	$ 815
• Painting	2,744	0
• Cleaning	4,800	5,600
• TOTAL	$7,971	$6,415

These costs were obtained in the following manner:

- Panel Replacement

  (No. of panels) x (Replacement cost per panel) = (Life cycle replacement cost)

  (5) x ($85.30) = $426.50

  The replacement cost per panel ($85.30) was taken from Table 5.8 (Detail A). (Travel/transportation is included.)

- Panel Painting

  (No. of paintings) x (Cost per painting) = (Life cycle painting cost)

  (6) x ($457.27) = $2,743.62

  The cost per painting ($457.27) was taken from Table 5.1 [45'-4" x 24'-0" array (roof mounted)].

- Panel Cleaning

  (No. of Cleanings) x (Cost per cleaning) = (Life cycle cleaning cost)

  (40) x ($120.00) = $4,800.00

  The cost per cleaning ($120.00) was taken from Table 5.5 for cleaning a roof mounted array of 32" x 96" panels by Penn Window Cleaning Company.

- <u>Shingle Replacement</u>

  [(No. of shingles) x (Replacement + handling costs)] + [(Set up/clean up) + (Travel/transportation cost)] x (No. of days required) = (Life cycle replacement cost)

  [50 x ($9.17 + $6.42)] + ($10.08 + $25.76) x (2) =

  (50 x $15.59) + $35.84 x 2 = $815.34

  Replacement, handling, set up/clean up, and travel/transportation costs were taken from Table 5.11.

- <u>Shingle Painting</u>

  $0 (Shingles have no frames which require paint.)

- <u>Shingle Cleaning</u>

  (No. of cleanings) x (Cost per cleaning) = (Life cycle cleaning cost)

  (40) x ($140.00) = $5,600

  Cost per cleaning ($140.00) was taken from Table 5.5 for cleaning a roof mounted array of shingles by Penn Window Cleaning Company.

This maintenance scenario indicates approximately $8,000 of maintenance costs will be incurred for the 32" x 96" panel and $6,500 will be incurred for maintenance procedures on photovoltaic shingles over the life of the array. Two items contribute heavily as cost drivers for this scenario. First, frame painting for the 32" x 96" panel should not be required, as the frames should be constructed of a material that does not require coating. Two options can be identified to accomplish this task. The frames may be constructed of a material such as aluminum which will not require the application of an additional coating during the expected array life. The other alternative would be to coat with a coating system which requires only initial treatment with an expected life of 20 years. In either case these solutions are accomplished in the factory and are reflected in the initial panel/module cost, not in the operation and

maintenance cost. Second, cleaning contributes better than 50% to the maintenance costs.

Materials need to be developed and utilized in photovoltaic panels which do not require cleaning. If, however, this option is not available for technological or economic reasons, simple, low-cost cleaning procedures must be utilized. A quick and simple procedure might include the photovoltaic system owner "hosing down" his array on a routine basis. The frequency of this operations would be a function of the geographic location of the array.

Assuming the above cost reduction conditions can be met, the repair/replacement scenario for the urban environment might consist of the following:

	Panel	Shingle
• Panel/shingle replacement	$ 427	$ 815
• Painting	0	0
• Cleaning - once every 3 years	800	933
• TOTAL	$1,227	$1,748

It becomes readily apparent that simple changes in the maintenance program will result in substantial cost reductions for operation and maintenance actions. Every cost effective method and material should be investigated for use in the design and fabrication of photovoltaic modules and arrays to insure the need for little or no life cycle maintenance actions.

Scenario 2.

For the purpose of the second scenario, assume a suburban environment (a moderately harsh environment) consisting of 1,000 square feet of photovoltaic array. Both a 32" x 96" panel array and a photovoltaic shingle array will be investigated. During the expected 20 year life of the array, cleaning will be required once every year, painting will be required once every five years and five panels will require replacement while 30 shingles will be replaced (at one time).

The following costs are generated as a result of this scenario:

	Panel	Shingle
• Panel/shingle replacement	$ 256	$ 504
• Painting	1,372	0
• Cleaning	2,400	2,800
• TOTAL	$4,028	$3,304

These costs were generated as follows:

- Panel Replacement

  (No. of panels) x (Replacement cost per panel) = (Life cycle replacement cost)

  (3) x ($85.30) = $255.90

  The replacement cost per panel ($85.30) was taken from Table 5.8 (Detail A). (Travel/transportation, handling, and all other replacement costs are included.)

- Panel Painting

  (No. of paintings) x (Cost per painting) = (Life cycle painting costs)

  (3) x ($457.27) = $1,371.90

  The cost per painting ($457.27) was taken from Table 5.1 [45'-4" x 24'-0" array (roof mounted)].

- Panel Cleaning

  (No. of Cleanings) x (Cost per cleaning) = (Life cycle cleaning cost)

  (20) x ($120.00) = $2,400

  The cost per cleaning ($120.00) was taken from Table 5.5 for cleaning a roof mounted array of 32" x 96" panels by Penn Window Cleaning.

- Shingle Replacement

  [No. of shingles x (Replacement and handling costs)] + (Set up/cleaning up + Travel Transportation cost) = (Life cycle replacement cost)

  [30 x ($9.17 + $6.42)] + ($10.08 + $25.76) =

  [30 x $15.59] + ($35.84) = $503.54

  Replacement, handling, set up/clean up, and travel/transportation costs were taken from Table 5.11.

- Shingle Painting

  $0 (Shingles have no frames which require paint.)

- Shingle Cleaning

  (No. of cleanings) x (Cost per cleaning) = (Life cycle cleaning cost)

  (20) x ($140.00) = $5,600

  Cost per cleaning ($140.00) was taken from Table 5.5 for cleaning a roof mounted array of shingles by Penn Window Cleaning Company.

As with scenario 1, the cost drivers for maintenance are cleaning and painting. Assuming the painting process can be eliminated through the use of materials which do not require coating or special processing prior to installation, and cleaning can be reduced to once every 5 years, the following costs are generated for maintenance operations:

	Panel	Shingle
• Panel/shingle replacement	$ 256	$ 504
• Painting	0	0
• Cleaning	480	560
• TOTAL	$ 736	$1,064

Again, it cannot be emphasized enough that considerable costs can be incurred as a result of standard maintenance procedures. These standard maintenance procedures must be minimized or eliminated in order to make the life cycle costing of photovoltaic power systems for residence more attractive.

Scenario 3.

This scenario examines the rural environment (the least harsh). In this case, cleaning is reduced to once every two years, no painting is required and one panel requires replacement while 10 shingles require replacement. Although it may not be necessary to replace 10 shingles from an electrical degradation standpoint, replacement may be required in order to maintain the water-tight integrity of the roofing system.

The following costs are generated as the result of this scenario:

	Panel	Shingle
• Panel/shingle replacement	$ 85	$ 192
• Painting	0	0
• Cleaning	1,200	1,400
• TOTAL	$1,285	$1,592

The above costs were determined as follows:

- Panel Replacement

  (No. of panels) x (Replacement cost per panel) = (Life cycle cost) replacement

  (1) x ($85.30) = $85.30

  The replacement cost per panel ($85.30) was taken from Table 5.8 (Detail A). (Travel/transportation, handling, and all other replacement costs are included).

- Panel Painting

  $0 (No painting is required.)

- Panel Cleaning

  (No. of cleanings) x (Cost per cleaning) = (Life cycle cleaning cost)

  (10) x ($120.00) = $1,200

  The cost per cleaning ($120.00) was taken from Table 5.5 for cleaning a roof mounted array of 32" x 96" panels by Penn Window Cleaning Company.

- Shingle Replacement

  [(No. of shingles) x (Replacement and handling costs)] + (Set up/clean up) + (Travel/transportation cost) = (Life cycle replacement cost)

  [10 x ($9.17 + $6.42)] + ($10.08) + ($25.76) =

  10 x $15.59 + ($35.84) = $191.74

  Replacement, handling, set up/clean up, and travel/transportation cost were taken from Table 5.11.

- Shingle Painting

  $0 (Shingles have no frames which require paint.)

- Shingle Cleaning

  (No. of Cleanings) x (Cost per cleaning) = (Life cycle cleaning cost)

  (10) x ($140.00) = $1,400

  Costs per cleaning ($140.00) was taken from Table 5.5 for cleaning a roof mounted array of shingles by Penn Window Cleaning Company.

If during the life of the array located in a rural (mild, nonharsh) environment, the cleaning operation could be eliminated by the photovoltaic system owner "hosing down" his array on a routine basis, the maintenance

costs would for all practical purposes be nonexistent. This, of course, would be the ideal situation.

Table 6.1 provides a summary of the costs generated for each of the above scenarios.

Scenario 4.

For the purposes of scenario 4 assume a roof mounted integral photovoltaic array consising of 32" x 96" panels and a roof mounted array consisting of approximately 600 photovoltaic shingles each 1.5 square foot in area. As a result of a meteorological calamity or catastrophic failure, 5 panels require replacement at one time. The cost associated with this replacement is approximately $283 which was derived from the following formula:

[(No. of panels) x (Panel replacement cost less travel/ transportation and set up/clean up)] + [(No. of days) x (travel/transporation + per day set up/clean up)] = (Total cost)

[(5) x ($85.30 -$35.84)] + [(1 day) x ($35.84)] = $283.14

Panel replacement, travel/transporation, and set up/clean up costs were taken from Table 5.8 (Detail A).

Assuming an equivalent area of shingles needs to be replaced, costs will be approximately $486 which was obtained using the following formula:

[(No. of internal shingles) x (Shingle replacement cost (internal))] + [(No. of perimeter shingles) x (Shingle replacement (perimeter cost))] +[(No. of days) x (Travel/transporation + Set up/clean up)] = (Total shingle replacement cost)

[(43) x ($3.90)] + [(27) x ($7.80)] + [(3) x ($35.84)] = $485.52

TABLE 6.1

REPAIR/REPLACEMENT SCENARIO SUMMARY

	PANEL		SHINGLE	
URBAN	CASE 1*	CASE 2**	CASE 1	CASE 2
• Replacement	$ 427	$ 427	$ 815	$ 815
• Painting	2,744	0	0	0
• Cleaning	4,800	800	5,600	933
• TOTAL	$7,971	$1,227	$6,415	$1,748
SUBURBAN				
• Replacement	$ 256	$ 256	$ 504	$ 504
• Painting	1,372	0	0	0
• Cleaning	2,400	480	2,800	560
• TOTAL	$4,028	$ 736	$3,304	$1,064
RURAL				
• Replacement		$ 85		$ 192
• Painting		0		0
• Cleaning		1,200		1,400
• TOTAL		$1,285		$1,592

*Case 1 - Worst case for each scenario

**Case 2 - Best case for each scenario

This example illustrates the increased replacement cost associated with a decreased module area. In the event of a catastrophic failure of a portion of the array, high maintenance replacement costs will be incurred when the array consists of small photovoltaic modules.

As a result of the above generated scenarios, an ideal scenario can be generated. This scenario would eliminate the need for all but the most necessary maintenance procedures. These necessary maintenance procedures might include panel replacement as a result of decreased electrical performance, panel replacement as a result of mechanical failure in the array integration system and panel replacement as a result of catastrophic failure due to natural phenomenon. Cleaning would be eliminated or reduced to a minimum, required only when severe soiling occurs as a result of freak natural occurrences, such as bird droppings, leaves deposited to the surfaces of the array and foreign matter deposited as a result of vandalism or neglect. The components chosen for the ultimate design would incorporate materials which are easy to clean and require no additional coating or treatment. All mechanical and electrical interconnects should be designed to facilitate any expected or unexpected maintenance procedures.

SECTION 7

CONCLUSION

Conclusions of this study are that:

1. Residential homeowners are not prone to perform routine maintenance procedures on the typical equipment found in a residence.

2. Homeowners are not likely to understand or wish to perform maintenance operations on electrical equipment.

3. Photovoltaic arrays which are not easily accessible will not receive the normal maintenance procedures, such as painting of racks or frames.

4. Cleaning costs will be significant, as professional cleaners will most likely perform this maintenance task.

5. The life cycle costs associated with cleaning may inhibit the use of photovoltaic panels in areas with high concentrations of airborne particulates if the cover materials are not self-cleaning.

6. Panel placement costs can be significant if attention is not given to the mounting type, installation/replacement type and the panel/array and its details.

7. Panel replacement costs can be reduced significantly through the use of multifunctional fasteners. This type fastener would perform both the electrical interconnection and the mechanical fastening required to secure a panel.

8. Array wiring must be easily accessible for maintenance purposes.

9. Wiring should be well protected from the environment, vandals and vermin.

10. Quick connect wirings systems should be used when possible to minimize labor and cost of maintenance operations.

11. If junction boxes are used placement should insure easy accessibility.

12. If stud terminals are used, the design of the terminal should allow for the easy removal and replacement of that terminal without damaging the panel.

13. Photovoltaic panels must be designed to be durable and typical of climatic conditions, and extensive series parallel redundancy should be incorporated in order to reduce the need for panel replacement.

14. Photovoltaic shingle array circuitry should be designed to allow for the loss of several shingle modules before replacement is required. The costs associated with the replacement of several shingles is not significantly larger than the costs for replacement of one shingle.

15. Thorough and detailed maintenance manuals must be developed by panel manufacturers.

16. As photovoltaic panels are electrically active and isolation is difficult, extensive documentation of all safety procedures must be supplied with all photovoltaic panels.

17. Insufficient information exists relative to the life expectancy and long term operational characteristics of photovoltaic panels. It is therefore difficult to develop accurate repair replacement strategies.

18. Continued studies investigating cleaning, safety, and circuitry redundancy must be performed to accurately develop life cycle costing of photovoltaic rays.

SECTION 8

RECOMMENDATIONS

Recommendations of the study are that:

1. Panels must be designed to be maintenance free.

2. Studies examining the requirements for cleaning of cover glazings should continue.

3. A detailed optimization study examining the requirements, costs and applications must be performed in order to develop accurate repair replacement strategy.

4. Safety studies must continue and address the possibilities of nonprofessionals performing maintenance tasks.

5. Detailed maintenance manuals must be developed.

6. Maintenance costs analysis should be performed by panel manufacturers, as these costs are very detail specific.

7. Further studies on series paralleling should be performed for residential scale photovoltaic arrays.

8. Operation and maintenance cost studies should be performed on a system wide level and/or to address all interrelated maintenance procedures.

9. The array designer should provide an easy method of access to the array for maintenance purposes. This may include the provision of a latter support over the face of the array that can

be easily moved across the array while loaded, similar to the rolling ladders in book stores and libraries or a foothold or ledge between horizontal rows of panels.

10. Multifunction fastening devices should be developed.

11. Techniques for waterproofing of arrays should be developed which do not require extensive gasketing material.

SECTION 9

NEW TECHNOLOGY

No new technology has been developed as a result of this contract.

SECTION 10

BIBLIOGRAPHY

1. DOE/JPL 955149-79/1, "Residential Photovoltaic Module and Array Requirements Study", Burt Hill Kosar Rittelmann Associates, June, 1979.

2. National Electrical Code Handbook, Boston, Massachusetts, National Fire Protection Association, 1978/

3. Engelsman, Coert, "1979 Residential Cost Manual", Van Nostrand Reinhold Company, New York, New York, 1979.

4. "Building Cost File", compiled by McKee-Berger-Mansueto, Inc., Van Nostrand Reinhold Company, New York, 1979.

5. "Building Construction Cost Data 1979", Robert Snow Means Company, Inc., 1978.

6. "Mechanical and Electrical Cost Data 1979", Robert Snow Means Company, Inc., New York, New York 1978.

7. "Building Systems Cost Guide 1979", Robert Snow Means Company Inc., 1979.

8. "1979 Dodge Construction Systems Costs", McGraw-Hill Inc., New York, New York, 1978.

9. MIT/LL-COO-4094-37, "Measuring Dirt on Photovoltaic Modules", Massachusetts Institute of Technology/Lincoln Laboratory, March, 1979.

10. MIT/LL-COO/4094-7, "Safety Procedures for the 25 KW Solar Photovoltaic Array at Mead, Nebraska", Massachusetts Institute of technology/Lincoln Laboratory, April 1978.

11. Handbook of Materials for Solar Energy Utilization - Part I & II, Illinois Institute of Technology Research Institute, February 1978

☆U.S. GOVERNMENT PRINTING OFFICE: 1980 -740 -145/ 591