INTERFACE DESIGN CONSIDERATIONS FOR TERRESTRIAL SOLAR CELL MODULES*

R. G. Ross, Jr†

Jet Propulsion Laboratory Pasadena, California

SUMMARY

The design of terrestrial solar cell modules is shaped by a number of constraints including the diverse needs of the variety of photovoltaic power applications, cost considerations, and the large area required to capture the sun's distributed energy. The interplay of these and other factors leads to a wealth of design approaches, each with certain advantages and disadvantages. This paper addresses the importance of increased solar array electrical efficiency and reliability in the achievement of future large-scale system cost goals. Included are discussions of the relative performance of various array module designs currently on the market, together with thoughts for further design improvements. Specific discussions are addressed to module efficiency, temperature control, and series/parallel reliability considerations.

I. INTRODUCTION

Though solar photovoltaic arrays have been used for many years as a primary source of power for space vehicles, the terrestrial use of photovoltaics has come into prominence only within the last couple of years. In support of decreased dependence on our limited fossil and nuclear fuel supplies, the U.S. Energy Research and Development Administration (ERDA) has an active program which addresses the greatly expanded development and utilization of terrestrial photovoltaic systems.(1) A major part of the National Photovoltaic Program is centered at the Jet Propulsion Laboratory and is referred to as the Low-cost Silicon Solar Array (LSSA) Project.(2) The primary objective of the LSSA project is the timely development of low-cost commercial-quality photovoltaic arrays through an active program of industrial and academic involvement. Analysis of the current state of terrestrial photovoltaics technology and the definition of future array requirements are important and necessary steps toward meeting this objective.(3)

II. ARRAY DESIGN CONSIDERATIONS

For present terrestrial arrays the primary requirement is to generate power for small, often remote electric-power applications. Typical examples include radio relays, navigational lights and horns, and remote climatological and environmental instrumentation. As shown in Table I, the nature of these applications, their size, their diversity and their technical needs strongly influence the characteristics of current arrays. Likewise, the applications are limited to those which can profitably utilize current array characteristics at their present high price.

To meet an objective of increased energy independence requires that photovoltaics become economically viable for the large energy consumers in the future. The obvious applications with significant energy usage include central electric utilities, industrial and commercial applications, and residential applications. As

Table I. Present Array Characteristics Versus Present Photovoltaic Power Application Characteristics

Present Application Characteristics	Present Array Characteristics
Small diverse markets, often requiring custom treatment, but individually incapable of supporting a significantly different array design or mass production methods.	Widely varying designs between manufacturers. Each manufacturer's line easily adaptable to widely varying applications and geared to hand assembly operations. Little or no interchangeability between manufacturers.
Consume less than 1000 watts of low voltage (<40 volt) DC power generally to charge storage batteries.	Modular design for various low-power and low-voltage levels consistent with typical lead-acid batteries. Electrical safety at low voltages not of concern.
Capable of paying a high price ($30/watt) for power and of buying a complete system just for evaluation purposes.	Moderately high priced, with primary emphasis on real-time performance demonstration. Support structure and installation costs of secondary importance.
Subjected to widely varying environmental extremes, generally in remote areas.	Designed for low maintenance under widely varying environmental extremes.

Proceedings of the 12th IEEE Photovoltaic Specialists Conference - 1976
Baton Rouge, Louisiana, A78-10902 01-44, pp. 801-806.

*This work presents the results of one phase of research carried out by the Jet Propulsion Laboratory, California Institute of Technology under NASA contract NAS7-100, sponsored by the Energy-Research and Development Administration.

†Engineering Manager, Low-cost Silicon Solar Array Project.

indicated in Table II, these applications place significantly different requirements on future solar arrays.

The largest requirement change is in the area of cost. Whereas small remote applications can achieve cost effectiveness with array prices of $30/watt and higher, large scale applications require array prices of 50¢/watt and less to compete with conventional means of electrical energy production. Although approximately three-fourths of the current cost of solar arrays is involved in the solar cells themselves, it is becoming increasingly clear that major cost reductions are also necessary in areas such as solar cell module encapsulation, array primary structure, and other system costs such as installation and maintenance. Many of these costs are directly related to total solar array area and require increased emphasis on array electrical efficiency to obtain reductions in the area dependent costs.

Array Efficiency Considerations

Present terrestrial silicon solar cell modules being procured by the LSSA project from four manufacturers have overall efficiencies at 28° C of around 11.5%, based on the total cell area. This includes losses due to encapsulation and cell mismatch. Unfortunately, when based on the module overall area, the typical efficiency drops to around 6.5% due to the 55 to 60% cell packing factor presently used. Though increased cell efficiency is one means of increasing future solar array efficiency, a second approach is clearly to attempt to increase the percent of the solar array which is active cell area.

Solar array active cell area is largely affected by three variables: 1) solar cell shape, which influences solar cell packing efficiency, 2) module size and shape, which influences the ratio of module border to enclosed module area, and 3) solar cell spacing as required to accommodate the electrical interconnection of the cells. Figure 1 describes the effect of solar cell shape and module size on cell packing efficiency within a square module with cells in direct contact with one another.* It can be seen that solar cell packing efficiency increases dramatically with increasing module size, though a point of diminishing returns is reached when the number of rows of cells exceeds approximately 15 or, in other words, the number of cells per module exceeds 200 or so. With 3 to 4 inch circular cells this point of diminishing returns is reached with modules around 4 foot square, as contrasted with present modules which are 1 to 2 foot square.

Another consideration addressed in Fig. 1 is the use of half cells to fill out the end spaces which are left when a staggered pack is used. With larger modules an approximately 3 percent gain in packing efficiency can be realized by utilizing half cells. This can be accomplished with little impact on the cell interconnect system as long as a series/parallel arrangement is used with a half cell in each group of parallel cells.

Table III summarizes typical overall packing efficiency values for a 4 foot square module of closely packed 3 to 4 inch diameter cells. The inter-spaces and 1/2-cell-spaces correspond to the additional area lost due to the usual 0.75 inch exterior border required for module mounting and the approximately 0.1 inch between cells required for cell electrical

Table II. Future Array Characteristics Versus Future Photovoltaic Power Application Characteristics

Future Application Characteristics	Future Array Characteristic
Large markets, each capable of supporting a significantly different array design and mass production methods.	Distinct array designs for significantly different applications, produced by mass production methods. Standardized interfaces to allow interchangeability between manufacturers for same application.
High-power, high-voltage AC loads.	Modular design for high-power, high-voltage levels and consistent with electrical codes for insulation, grounding and safety features.
Require energy costs consistent with electric utility rates, are unable to accept significant risks and cannot afford to purchase a system for evaluation purposes.	Low-cost, long-lifetime designs with proven performance histories and consistent with low system cost (e.g., low support structure cost) and low installation and maintenance costs.
Cost/benefit may be improved by photovoltaics providing additional functions such as: • Aesthetic/architectural functions. • Water barrier functions, as the exterior surface of dwelling or roof. • Thermal-heating functions, as combined photovoltaic/solar-thermal heating panels.	Will contain other functional attributes as a means of improving cost/benefit to user.

*Rectangular modules have similar relationships which depend on which way the cells are laid out with respect to the length and width.

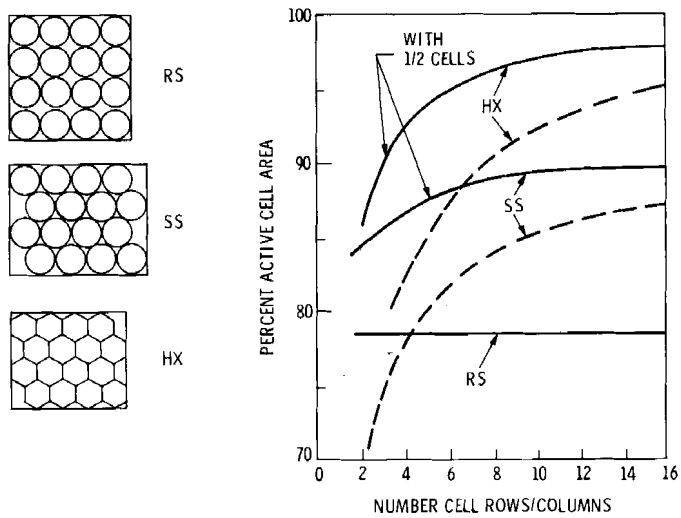

Fig. 1. Solar cell packing efficiency for square modules

Table III. Packing Efficiency of 4 foot by 4 foot Module

Item	Lost area, %	
	Round cells	Hexagon cells
Border frame	6 - 8%	6 - 8%
Inter-spaces	10	2
1/2 Cell spaces	3	3
Interconnect spaces	3 - 5	4 - 6
Total	22 - 26	15 - 19

interconnection. With these values it can be seen that overall packing efficiencies of 75 to 85 percent are easily achievable. Even higher efficiencies can be obtained by lowering the percentage of border area by using square or rectangular cells, and by reducing the cell interconnect spaces through the use of wrap-around-contact cells, for example.

Array Temperature Control Considerations

Because array electrical performance is strongly coupled to solar cell operating temperature, any attempt at improving array efficiency should also consider improved temperature control. As part of the JPL LSSA project activities a wide range of thermal tests was conducted on presently available terrestrial solar cell modules. Figure 2 indicates the large difference in operating cell temperature observed for the various module construction types. If each module design had the same power output at 28° C, the hottest modules in Fig. 2 would have nearly 20% less power than the coolest under typical operating conditions. This amount of variation reflects not only as more or less power per "nameplate" watt, but seriously limits module interchangeability because of series/parallel mismatch losses.

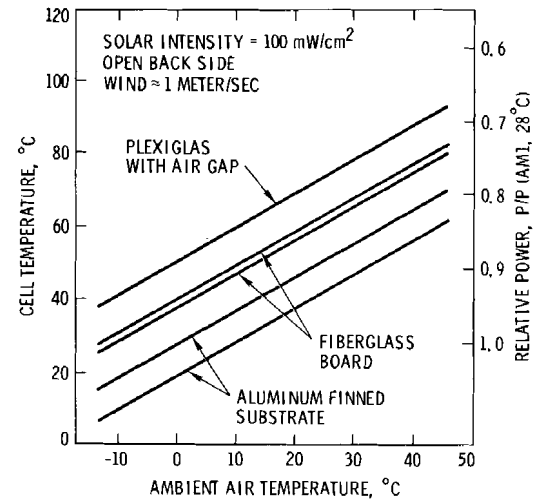

Fig. 2. Typical operating temperature of present solar array modules

To determine the key parameters responsible for the operating temperature differences, multi-node computer models were constructed for each module type based on its thermal properties and construction geometry. Subsequent sensitivity analyses identified the following characteristics as key to reduced cell operating temperature:

1) The presence of good thermal conductance paths from the cell to high emittance external surfaces is the primary requirement for low operating temperatures. Air gaps between the cell and exterior surfaces create greenhouse effects which are extremely harmful and raise cell temperature by about 15° C.

2) The presence of good lateral conduction from the cell to low absorptance, high emittance surfaces between the cells can reduce cell temperature by as much as 10° C.

3) The presence of finned rear surfaces to increase convective cooling can reduce cell temperature by about 5° C.

Figure 3 presents the variation in cell temperature with changing insolation level for the hottest and coolest designs displayed in Fig. 2. The data represent no-load measurements made under open-air field test conditions with thermocouples attached directly to the solar cells. From these data one can see that the simple expression

$$T_C = T_A + 0.3S \qquad (1)$$

where

T_C = Cell Temperature (° C)

T_A = Air Temperature (° C)

S = Solar Insolation Level (mW/cm^2)

provides a good first-order approximation for the operating temperature of a typical solar cell module under open-back field mounting conditions.

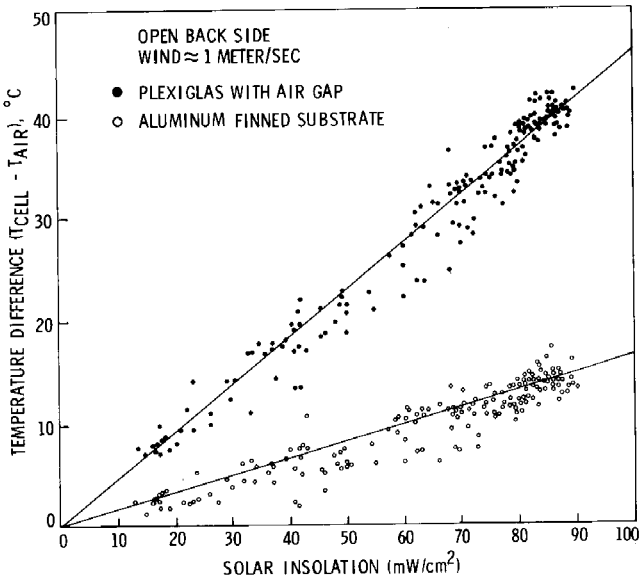

Fig. 3. Solar cell temperature measurements for hottest and coolest modules in Fig. 2

In the future it may be desirable to rate module electrical output at a "nominal operating temperature" to allow meaningful comparison between modules with different thermal characteristics. Such an approach would also be a step in the right direction with respect to eventual module interchangeability between manufacturers.

Module Reliability Considerations

As indicated in Fig. 1, one means of increasing solar array efficiency is to increase the number of solar cells per module, and hence the size of the module. This increase in module size has a number of additional advantages and disadvantages which accompany the increased efficiency. Table IV summarizes some of the important additional parameters which change with size.

When considering Fig. 1 it is clear that the primary reason for the increased efficiency of larger modules is the reduced ratio of border length to enclosed module area. A second advantage to the reduced border length is reduced cost for special border treatment or framing, and improved reliability. Because the module edge is very susceptible to damage and degradation, the reduced border length effectively increases module reliability. Array reliability is also enhanced by the reduction in modules per kilowatt and thus the reduction in mechanical and electrical attachments for a given size system.

In contrast to the reduction in border and attachment fasteners, increased module size generally leads to increased numbers of cells per module and thus to decreased module reliability unless appropriate steps are taken. The effect on array reliability varies depending on the extent that fewer larger modules may lead to poorer series/parallel redundancy at the array level.

The obvious solution to the reduced module reliability is to incorporate series/paralleling of cells within the module. When this is done the loss or shadowing of a single cell results in only a partial loss in module output, though it will be accompanied by "hot spot" cell heating effects as described by Blake and Hanson.(4) An important design consideration in the selection of which series/parallel configuration to use is the limiting of the "hot spot" cell heating to acceptable levels in the case where a module has a single cell failure.

To help visualize the "hot spot" cell heating phenomenon, consider the series/parallel module configuration shown in the left hand side of Fig. 4. The right hand side of the figure indicates the effect of the loss of a single cell on the current-voltage (I-V) characteristics of each section of the module and on the resultant module output. In the case shown the two remaining cell strings in section B dissipate nearly the entire maximum power output of section A under short-circuit-current conditions. Because the ratio of cells in section A to the functional cells in section B is 18/6 = 3, the section B cells are each called upon to dissipate approximately 3 times their normal maximum power output.

The degree to which this level of heating is of concern depends upon the expected temperature rise of the heated cells and on the temperature sensitivity of the cell/module construction. One means of

Table IV. Effect of module size/efficiency

Module type	Module Efficiency[a]	Cells/module	Modules/kW	Border length per enclosed area, ft/ft^2	Module price[b]
1 × 2 ft module	6	20	84	3	$120
2 × 2 ft module	6	40	42	2	$240
2 × 4 ft module	7	75-250	18	1.5	$550
4 × 4 ft module	8	150-500	8	1.0	$1250

[a]Cell efficiency = 11.5% (including transmission and mismatch losses).
[b]At $10/watt.

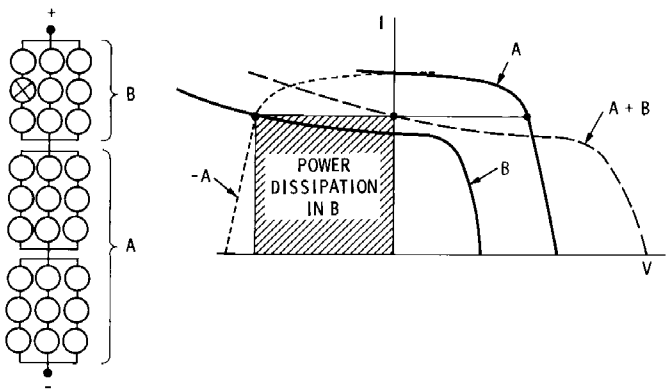

Fig. 4. Visualization of "hot spot" cell heating

estimating the expected "hot spot" cell temperature is to convert the heating to an equivalent solar insolation so that the relationships shown in Figs. 3 and 4 can be utilized. Using this approach the total effective solar heating level ($\overline{S}$) is the sum of the actual solar-insolation level (S) and the "hot spot" heating and is given by

$$\overline{S} = S \left[1 + \frac{(P/P_{max}) \times (\text{Cell Efficiency}/100)}{\text{Solar Absorptance of Encapsulated Cell}} \right] \quad (2)$$

Using the example shown in Fig. 4 together with typical terrestrial module parameters gives the following total effective solar heating level under 100 mW/cm^2 solar insolation conditions:

$$\overline{S} = 100 \left[1 + \frac{(3)(12/100)}{0.85} \right] = 142 \text{ mW/cm}^2$$

From Equation (1) presented earlier in this paper the resultant "hot spot" cell temperature for a typical terrestrial module under this heating level is given by:

$$T_{cell} = T_{Air} + (0.3 \times 142)$$

$$= 83°\text{C for a } 40°\text{C } (104°\text{F}) \text{ day} \quad (3)$$

In actual application the cell temperature will be slightly less than this due to lateral conduction of heat from the "hot spot" region to cooler outlying regions.

Although the above example is tied to the series/parallel configuration shown in Fig. 4, the approach is easily generalized to any series/parallel configuration. The chief difficulty is in determining the power dissipated in the "hot spot" cells under the worst-case operating conditions for the failed array system. If we are only interested in the relative performance of various series/parallel configurations, this and other difficulties can be circumvented by bounding the problem and examining the "hot spot" cell heating under module short-circuit conditions. This condition is the worst case for a single module or group of parallel modules, and is the worst case for series modules where bypass diodes are incorporated to prevent reverse module voltages.

As shown in Fig. 4 the operation of a failed module under short-circuit conditions is characterized by the reverse voltage in the affected series block (section B) being equal to the forward voltage in the remaining sections of the module (section A). This operating condition is defined by the intersection of the I-V curve for the functional portion of section B with the I-V curve for section A reflected about the ordinate into the negative voltage quadrant, i.e., the intersection of the B and -A curves in Fig. 4.

To find the operating point for other series/parallel configurations requires constructing the B and -A I-V curves associated with these configurations. Figure 5 combines these curves in a single graph which provides a ready means for evaluating the "hot spot" heating associated with a single cell failure within a module with any series/parallel configuration. It is equally applicable to estimating the characteristics of series/parallel module configurations within an overall array system.

To use the figure one locates the intersection of the parallel-cell and series-cell-block lines corresponding to the configuration of interest. The horizontal position of the intersection point establishes the "hot spot" cell heating under module short-circuit conditions as indicated on the lower scale. The vertical position of the intersection point establishes an estimate of the percent module power loss due to a single cell failure, and is thus a measure of the improved reliability achieved by the series/paralleling. From Fig. 5 it is clear that increased numbers of parallel cells and increased numbers of series blocks both decrease the percent module power loss due to a single cell failure. However, one must be careful about using large numbers of series blocks with low numbers of parallel cells because of the large "hot spot" cell heating which occurs under these conditions.

When large numbers of modules are in series together, the effect is to increase the number of series blocks. Under worst-case conditions a module with a failed cell can be driven to a current level equal to the module's original short-circuit current. The "hot spot" cell heating under this condition is given in Fig. 5 by the intersection of the parallel-cells line for the module of interest and the 0%-module-power-loss line. For four cells in parallel it can be seen

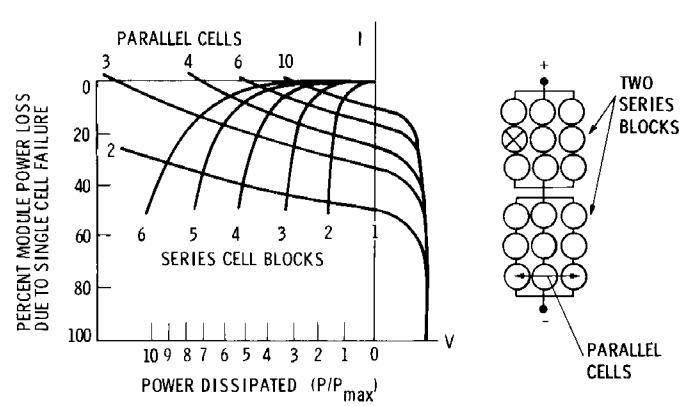

Fig. 5. Effect of series/paralleling on "hot spot" cell heating

that the maximum "hot spot" cell heating is equal to about 7.5 times the cell maximum power. In cases where the "hot spot" cell heating is unacceptable at current levels above the module short-circuit current, a bypass diode can be used to limit the current at the short-circuit value.

III. CONCLUSIONS

The application of photovoltaic solar arrays to future large-scale electric power generation will require a number of changes from present terrestrial array technology. The changes result from the high cost of present photovoltaic devices and the different functional requirements of future photovoltaic systems. It is recognized that increased electrical efficiency and reliability are two aspects of array design which must receive increased emphasis if future large-scale system cost goals are to be achieved. Data have been presented which indicate that progress in both of these areas can be influenced through the adoption of larger module sizes together with appropriate series/paralleling of cells within modules. Although the increased cost of larger modules will moderate the immediate adoption of very large modules, substantial progress toward improved module efficiency and reliability has been made to date, and the prospect of future large-scale photovoltaic application appears very promising.

REFERENCES

1. Magid, L. M., "The U.S. Photovoltaic Conversion Program," presented at the International Colloquium on Solar Energy, Toulouse, France, March 1-5, 1976.
2. "First Annual Report of the Low-cost Silicon Solar Array Project," JPL Report 5101-3, Jet Propulsion Laboratory, Pasadena, California, Aug. 9, 1976 (JPL internal document).
3. Ross, R. G., "Design Considerations of Solar Arrays for Terrestrial Applications," Proceedings of the 1976 International Solar Energy Society Conference, Winnipeg, Canada, August 15-20, 1976, Volume 7, pp 48-56.
4. Blake, F. A., and Hanson, L. L., "The 'Hot Spot' Failure Mode for Solar Arrays," Paper 699070 in the Proceedings of the 1969 IECEC Conference, September 1969, pp. 575-581.