4/25
11-13-80
JRC

2030

DOE/JPL/955367-80/1 (Exec. Summ.)

PHOTOVOLTAIC MODULE ELECTRICAL TERMINATION DESIGN REQUIREMENT STUDY

Executive Summary

MASTER

By
F. J. Mosna, Jr.
J. Donlinger

July 1980

Work Performed Under Contract No. NAS-7-100-955367

Motorola Inc.
Schaumburg, Illinois

and

ITT Cannon Electric Company
Santa Ana, California

U.S. Department of Energy

DIST 351
NTIS 25

Solar Energy

DISTRIBUTION OF THIS DOCUMENT IS UNLIMITED

DISCLAIMER

This report was prepared as an account of work sponsored by an agency of the United States Government. Neither the United States Government nor any agency Thereof, nor any of their employees, makes any warranty, express or implied, or assumes any legal liability or responsibility for the accuracy, completeness, or usefulness of any information, apparatus, product, or process disclosed, or represents that its use would not infringe privately owned rights. Reference herein to any specific commercial product, process, or service by trade name, trademark, manufacturer, or otherwise does not necessarily constitute or imply its endorsement, recommendation, or favoring by the United States Government or any agency thereof. The views and opinions of authors expressed herein do not necessarily state or reflect those of the United States Government or any agency thereof.

DISCLAIMER

Portions of this document may be illegible in electronic image products. Images are produced from the best available original document.

DISCLAIMER

"This book was prepared as an account of work sponsored by an agency of the United States Government. Neither the United States Government nor any agency thereof, nor any of their employees, makes any warranty, express or implied, or assumes any legal liability or responsibility for the accuracy, completeness, or usefulness of any information, apparatus, product, or process disclosed, or represents that its use would not infringe privately owned rights. Reference herein to any specific commercial product, process, or service by trade name, trademark, manufacturer, or otherwise, does not necessarily constitute or imply its endorsement, recommendation, or favoring by the United States Government or any agency thereof. The views and opinions of authors expressed herein do not necessarily state or reflect those of the United States Government or any agency thereof."

This report has been reproduced directly from the best available copy.

Available from the National Technical Information Service, U. S. Department of Commerce, Springfield, Virginia 22161.

Price: Paper Copy $6.00
Microfiche $3.50

DRD NO. SE-3

DOE/JPL/955367-80/1 (Exec. Summ.)
Distribution Category UC-63b

PHOTOVOLTAIC MODULE ELECTRICAL TERMINATION DESIGN REQUIREMENT STUDY

EXECUTIVE SUMMARY

DRD NO. SE-3

JULY 1980

JPL CONTRACT NO. 955367

PREPARED BY:

F. J. MOSNA, JR.
J. DONLINGER

MOTOROLA INC./ITT CANNON

THE JPL LOW-COST SOLAR ARRAY PROJECT IS SPONSORED BY THE U. S. DEPARTMENT OF ENERGY AND FORMS PART OF THE SOLAR PHOTOVOLTAIC CONVERSION PROGRAM TO INITIATE A MAJOR EFFORT TOWARD THE DEVELOPMENT OF LOW-COST SOLAR ARRAYS. THIS WORK WAS PERFORMED FOR THE JET PROPULSION LABORATORY, CALIFORNIA INSTITUTE OF TECHNOLOGY BY AGREEMENT BETWEEN NASA AND DOE.

PROJECT NO. 2369

DISTRIBUTION OF THIS DOCUMENT IS UNLIMITED

RB

ABSTRACT

Motorola Inc., in conjunction with ITT Cannon, has conducted a study to develop information to facilitate the selection of existing, commercial, electrical termination hardware for photovoltaic modules and arrays.

Module and array design parameters were investigated and recommendations were developed for use in surveying, evaluating, and comparing electrical termination hardware. Electrical termination selection criteria factors were developed and applied to nine generic termination types in each of the four application sectors. Remote, residential, intermediate and industrial. Existing terminations best suited for photovoltaic modules and arrays were identified. Cost information was developed to identify cost drivers and/or requirements which might lead to cost reductions. The general conclusion is that there is no single generic termination that is best suited for photovoltaic application, but that the appropriate termination is strongly dependent upon the module construction and its support structure as well as the specific application sector.

CONTENTS

Section		Page
1	SUMMARY	1
2	INTRODUCTION	3
	2.1 Objectives	3
	2.2 Report Format	4
	2.3 Cost Basis	4
3	MODULE/ARRAY TERMINATION CHARACTERISTICS	5
	3.1 Codes and Standards	5
	3.2 Module Construction and Support Structures	5
	3.3 Electrical Considerations	7
	3.4 Environment Considerations	8
	3.5 Selection Criteria Factors	9
	3.6 Summary	13
4	MODULE TERMINATION IMPLICATIONS	14
	4.1 Surveys	14
	4.2 Generic Termination Types	14
	4.3 Code Implications of Each Termination Type	21
	4.4 Electrical and Safety Implications	23
	4.5 Cost Tradeoff Implications	25
5	CONCLUSIONS	33
6	RECOMMENDATIONS	34
7	NEW TECHNOLOGY	35
	APPENDICES	

LIST OF TABLES

TABLE NUMBER	TITLE	PAGE
1	Codes and Standards Applicability	6
2	Selection Criteria	10
3	Application Attribute Weighting Factors	11
4	Ranking by Numerical Order	12
5	Design Implications	15
6	Summarization	16
7	Electrical and Safety Implications	24
8	Results of MTBF Calculations	27

LIST OF FIGURES

FIGURE NUMBER	TITLE	PAGE
1	Factory and Field Assembly Costs for Termination Types, Residential Application.	28
2	Field Termination Replacement due to Termination Failure.	29
3	Suggested Crimp Termination Seal	31
4	Amp Inc., Solar Module Connector	32

Section 1

SUMMARY

This report presents the results of a study conducted by Motorola, Inc., and ITT Cannon. The objective of the study was to develop information to facilitate the selection of life-cycle cost-effective electrical termination hardware for photovoltaic modules and arrays. The approach used was to develop module and array termination design requirements and electrical termination selection criteria for each of the four application sectors; to identify existing candidate termination hardware; to characterize termination attributes and their cost dependencies; and to identify cost drivers and/or requirement modifications that could lead to lower costs.

The identification of existing candidate termination hardware began with a thorough search of available catalog information relative to existing connectors and terminations for outdoor use. These connectors and terminations were then categorized into nine generic classifications.

Concurrent with this activity surveys were sent to termination manufacturers and photovoltaic module manufacturers and users in an attempt to identify code requirements, cost information and recommendations for specific terminations for the remote, residential, intermediate, and industrial application sectors.

As a result of surveys, code searches, and a review of module construction and their support structures, a list of module termination attributes was developed. To enable comparison the attributes were converted into numerical quantities by a numerical weighting system against which each generic termination was rated.

Results of the numerical evaluation, which rated each attribute for each of the nine generic termination types, show the crimp-type, plug/receptacle, and screw terminations to be the most appropriate existing electrical terminations for use in all four application sectors. In general, the three top rated terminations were very close in numerical values.

Based on the cost analysis the least expensive termination is the crimp-type, followed by the plug/receptacle, and last the screw termination (which was the most expensive of the nine generic termination types initially surveyed/ studied).

Because of the large number of variables related to module construction and their support structures it was not possible to establish a single set of design constraints applicable to all modules. Consequently, an evaluation methodology was developed which allows module manufacturers and users to establish their own set of weighting factors and rating scores based upon their specific module configuration and its intended application. The result is a method permitting the selection of the optimum module termination for a specific module and its support structure.

A significant finding is that code interpretation as to the acceptability of a specific termination is likely to vary due to the lack of guidelines and subjective interpretation by each inspector. Early efforts to obtain product approval by a nationally-recognized testing laboratory will aid in minimizing this effect.

Section 2

INTRODUCTION

This final report documents a study of commercially available, electrical termination hardware suitable for use in photovoltaic modules and arrays. The study was performed by Motorola, Inc., and ITT Cannon for the Engineering Area of the Jet Propulsion Laboratory's Low-Cost Solar Array Project under Contract No. 955367 as a part of the U. S. Department of Energy's Solar Photovoltaic Conversion Program.

The primary emphasis of the study was on the design requirements imposed on the termination by the module, panel and array. These requirements are the direct result of module, panel and array technology currently being developed for the 1986 period. With an eventual allocation of $0.70 per peak watt (1980 $) for the whole module, termination hardware cost should not be a significant fraction of that amount. An important aspect of the study was to seek out and describe the cost dependencies of each attribute or property important to the selection of electrical termination hardware for solar cell modules and arrays. By doing so, cost drivers could be identified.

2.1 Objectives

The direct objectives of the study were:

- Study, investigate, evaluate, and identify existing electrical termination hardware best suited for terrestrial photovoltaic modules and arrays based upon projected 1986 photovoltaic module technology.

- Develop electrical termination selection criteria factors for existing terminations.

- Identify design improvements and cost drivers.

The approach used to accomplish the objectives was to review the information base for existing outdoor electrical termination hardware. Attributes of each of the nine generic types of electrical terminations found to be applicable in photovoltaic module interconnection were then evaluated. Results from the study include:

- Termination hardware considerations, including: environmental, system interface, design, production, and application requirements.

- A catalog of existing, generic candidate termination hardware and their attributes.

- A summary of the attribute cost dependencies and cost sensitivities.

- Areas for cost improvement through design improvements or modification of requirements.

2.2 Report Format

This report is divided into the final report and its appendices. The final report is a distillation of the entire study and its implications relative to module/array terminations. Each summary topic in the final report references one or more appendices. Each appendix provides details and additional supporting information.

2.3 Cost Basis

Costs presented in the final report and appendices are expressed in constant 1980 dollars unless otherwise stated. Costs were developed in 4th quarter 1980 dollars.

Section 3

MODULE/ARRAY TERMINATION CHARACTERISTICS

To develop module/array termination requirements for photovoltaic applications it is first necessary to understand those aspects of photovoltaic systems which place constraints or requirements on the selection of a termination. These aspects are the basis for design requirements in the various application sectors and must be considered.

3.1 Codes and Standards

The National Electrical Code (NEC) is a nationally accepted guide to the safe installation of electrical wiring and equipment whose sole objective is safeguarding the public in the utilization of electricity. Since photovoltaic systems are electrical in nature, compliance with requirements in the NEC will be required for residential and intermediate application sectors. The generation portion of central station electric utilities is presently governed by utility company practices made up of industry standards (e.g., IEEE, ANSI, NEMA) and utility standards. In the remote application sector it is necessary to consider the specific installation. At the present time any non-government-operated, remote installation which could be considered hazardous to personnel safety should comply with NEC requirements.

Standards, published through the consensus process by organizations such as IEEE, NEMA, and ANSI, offer ways through which code criteria can be met.

Table 1, summarizes the applicability of codes and standards by application sector, while Appendix 5.3 provides additional information.

3.2 Module Construction and Support Structures

Because terrestrial photovoltaics is an emerging technology, innovative termination concepts and designs may be introduced which are not specifically or adequately addressed by existing codes and standards, resulting in confusion, inconsistencies, and possible rejection.

TABLE 1

CODES AND STANDARDS APPLICABILITY

APPLICATION SECTOR	FINDING
. REMOTE	. COMPLIANCE TO NEC REQUIRED FOR NON-GOVERNMENT INSTALLATIONS WHICH COULD BE HAZARDOUS TO PERSONNEL.
. RESIDENTIAL	. COMPLIANCE TO NEC REQUIRED.
. COMMERCIAL-INDUSTRIAL	. COMPLIANCE TO NEC REQUIRED.
. LARGE INDUSTRIAL/CENTRAL STATION	. FOLLOWS UTILITY COMPANY PRACTICES MADE UP LARGELY OF INDUSTRY STANDARDS: IEEE/ANSI/NEMA.

Because of the large number of combinations of module, panel, and array support structures it was not feasible to establish a single set of termination design requirements. This section presents various aspects which, when considered on a case basis, may impose constraints or requirements on the termination.

Terminations are required for interconnecting modules to form an array; a module to the rest of the system, if a single module is used; and module/array ground conductors.

The mechanical connection of the termination to the module is a direct function of both the internal and external design of the module itself. The considerations of attaching a termination must resolve, by cost-effective methods: the mechanical attachment of the termination to the frame or solar cell encapsulation system; the sealing of leads leaving the encapsulation system; the sealing of leads entering the termination; the electrical isolation between the leads and frame; and the sealing of interconnect wires at the termination.

Since the wide variety of support structures currently in use prohibits the establishment of a single set of geometric and electrical requirements on the termination, the study assumes that the support structures permit free access to module output(s) and do not restrict cable routing. Appendix 5.1 contains information relative to concerns and considerations related to support structure constraints.

3.3 Electrical Considerations

Appendix 5.2 contains information relative to electrical considerations resulting from photovoltaic module configuration. To improve module reliability solar cells connected in series strings are then connected in parallel to minimize the effects on performance resulting from cell cracking or shadowing. Bypass diodes are then used to prevent back-biasing of series strings of solar cells due to a cracked cell. Module termination selection is affected if the placement of the diodes are external to the module. External diodes are usually located across the module output terminals. Results to date indicate that appropriate series/paralleling coupled with internally

mounted diodes would greatly enhance module performance and minimize extra requirements for terminal selection.

3.4 Environment Considerations

Photovoltaic systems are intended for widespread use in a variety of geographical climates as well as in areas of heavy pollution. The environment could consist of any or all of the following:

- Moisture - hail, snow, rain, etc.
- Temperature - extremes of heat and cold, cycling
- Corrosive Atmospheres - salt spray, smog, ultraviolet, acid, etc.
- Dynamic and Static Loading - from wind, earthquake, maintenance, shipping, handling, etc.
- Vandalism - from man, animals, birds
- Vegetation - trees, vines, fungus, etc.
- Lightning strikes

The long-term effects of environmental conditions upon termination performance are not adequately documented, and attempts at correlating accelerated aging test data with real-time results have met with limited success. For this reason, until environmental durability is demonstrated, it is recommended that photovoltaic terminations be sealed to enhance reliability and aid in termination protection. Consistent with this recommendation is that materials should be prudently selected for use in outdoor environments.

Methods of environmental sealing of terminations were investigated and the details are presented in Appendix 5.7. It was found that a number of terminations could be obtained with or without inherent sealing capability.

Since all terminations were to be considered sealed, and to be consistent with the goal of minimum life-cycle cost, each generic termination was evaluated using the most economical method of sealing compatible with the termination geometry. The three methods used to seal terminations consisted of shrink tubing, electrical tape or junction boxes. A description of the methods are presented in Appendix. 5.7.

3.5 Termination Selection Criteria

The starting point for establishing module termination selection criteria factors or attributes is a photovoltaic module whose geometrical and electrical design and support structure has been established by the module manufacturer.

Selection criteria development began by listing attributes affecting termination selection. The attributes were then grouped into five categories: durability; function; manufacturability; utility; Code acceptability; and cost. The attributes within each category were screened for completeness and to eliminate redundancies. Table 2 is the final list of attributes considered pertinent. Each attribute is specifically defined in Appendix 2.0.

Although the attributes are qualitative in nature, it was recognized that a specific attribute could be more or less important than the other attributes. As a measure of this relative importance an arbitrary scale of one (poor) to four (excellent) was established.

In addition, since the degree of importance of an attribute may vary depending on the specific application sector (remote, residential, intermediate, or large industrial), four sets of numerical weighting factors were established. These are shown in Table 3. The numerical weighting values were assigned by ITT Cannon in conjunction with Motorola and represent their best subjective judgement of the relative importance of each attribute.

Each of the generic types of connector was then rated or judged against the list of attributes for each application sector. Once again, a scale of one (poor) to four (excellent) was used. An overall numerical rating could then be established by multiplying the weighting factor times the rating value assigned to a specific attribute for a generic termination and summing these values for all attributes. The results are presented in Table 4. Details of each attribute, weighting factor, and rating are presented in Appendices 2.0, 3.0, and 4.0

Appendix 5.4 consists of a critique of "Projected 1986 Photovoltaic Module Engineering and Performance Characteristics" submitted as a starting point for establishing module termination selection criteria factors. As a result of

FUNCTIONAL

Voltage Rating
Current Rating
Insulation and Seal Level
Ground Provision
Heat Dissipation
Disconnect Cycles
Contact Resistance and Pressure
Reliabillity (MTBF)

MANUFACTURING

Preparation Time
Producibility
Repairability
Labor Skill Level
Special Tools
Safety

ENVIRONMENTAL DURABILITY

Moisture
Temperature Cycling
Corrosive Atmosphere and Contamination
Vandalism
UV Radiation
Vibration and Strain Relief

UTILITY

Series and Parallel Connections
Wire-to-Wire and Panel-to-Wire Connections

CODE

NEC

COST

TABLE 2

SELECTION CRITERIA

TABLE 3

APPLICATION ATTRIBUTE WEIGHTING FACTORS*

ATTRIBUTES / APPLICATIONS	DURABILITY								FUNCTIONAL									MANUFACTURING						UTILITY				CODE		
	MOISTURE	TEMP. CYCLING	CORROS. ATM.	CONTAMINATION	VANDALISM	UV RADIATION	VIBRATION	STRAIN RELIEF	VOLTAGE RATING	CURRENT RATING	INSUL. LEVEL	SEAL LEVEL	GND. PROVISION	HEAT DISS.	DISCONN. CYCLES	CONTACT RES.	RELIABILITY (MTBF)	PREPARATION	PRODUCIBILITY	REPAIRABILITY	LABOR SKILL LEVEL	SPECIAL TOOLS	SAFETY	SERIES CONN.	PARALLEL CONN.	WIRE-TO-WIRE	PANEL-TO-WIRE	NEC		
REMOTE	4	4	4	4	4	4	4	4	4	4	4	4	1	4	1	4	4	2	2	3	2	2	4	1	4	4	1	2		
RESIDENTIAL	3	2	1	2	2	3	2	2	4	4	4	4	4	1	1	1	2	2	2	3	2	2	4	2	3	3	2	4		
INTERMEDIATE	4	4	3	2	2	4	2	2	4	4	4	4	4	2	1	2	3	2	2	3	2	2	4	3	2	2	3	4		
INDUSTRIAL	3	2	4	3	2	3	2	3	4	4	4	4	4	4	1	4	4	2	2	3	2	2	4	4	1	1	4	4		

* - These factors are to be multiplied by termination attribute ratings assigned by the evaluator and summed for all attributes.

TABLE 4
RANKING BY NUMERICAL ORDER

RANK \ APP'L	REMOTE	RESIDENTIAL	INTERMEDIATE	INDUSTRIAL
1	PLUG/RECPT (301)	PLUG/RECPT (254)	PLUG/RECPT (284)	PLUG/RECPT (289)
2	CRIMP (293)	CRIMP (239)	SCREW (267)	SCREW (283)
3	SCREW (287)	SCREW (238)	CRIMP (260)	CRIMP (272)
4	INSL. DISP. (271)	INSL. DISP. (213)	INSL. DISP. (244)	INSL. DISP. (256)
5	WELDED (260)	TWIST-ON (209)	TWIST-ON (231)	TWIST-ON (240)
6	TWIST-ON (259)	HAND-SOLDER (197)	WELDED (226)	HAND-SOLDER (237)
7	WIRE-WRAP (256)	WELDED (198)	WIRE-WRAP (224)	WIRE-WRAP (237)
8	HAND-SOLDER (249)	WIRE-WRAP (195)	HAND-SOLDER (223)	WELDED (236)
9	SPRING CLIP (242)	SPRING CLIP (180)	SPRING CLIP (209)	SPRING CLIP (222)

this study it appears that future module termination hardware will require higher current capacities because of higher cell efficiency, higher cell packing density, and larger module/panel sizes.

3.6 Summary

The establishment of requirements for module termination hardware is dependent upon constraints or requirements resulting from the specific photovoltaic module configuration. The NEC, which currently does not address photovoltaics, is a major factor in termination selection from the standpoint of safety of installation and operations. The module design, its support structure, and the location of the terminal place geometrical as well as electrical constraints on the termination. The requirement for an equipment ground will increase the cost of the module but is necessary for personnel safety when non-current-carrying, conductive parts are inherent in the module configuration. A system ground, or means to limit maximum voltage with respect to ground, is recommended. In addition, environmental sealing is recommended.

Section 4

MODULE TERMINATION IMPLICATIONS

A brief summary of the study results in each major topic area is provided. Details of each major effort are presented in the appropriate appendix referenced with each summary.

4.1 Surveys

To obtain information about terminals currently being supplied or recommended for use in photovoltaic applications, two separate questionnaires were generated: one for terminal manufacturers and one for module manufacturers and module users. Responses from termination manufacturers produced little tangible data, and although the majority responded with catalogs and brochures, none made any attempt to recommend a specific termination in their product line. Appendix 5.5 contains the details.

Responses from module manufacturers and users indicate that the majority of module configurations employ lead wires extending from the back of the module. Design implications resulting from the surveys are shown in Table 5.

4.2 Generic Termination Types

Nine generic types of electrical terminations were found to show promise in photovoltaic module interconnection. Table 6 summarizes each type, provides a brief description of basic attributes, current capabilities, limitations, and expected (or anticipated) environmental durability. Additional information is contained in Appendix 5.6.

crimp: a crimp barrel is compressed tightly on the conductor by a special tool resulting in intimate metal-to-metal contact.

hand-solder: mechanically joined conductors are heated to melting-solder temperatures and applying solder. The solder flows into the conductors and acts as both bonding agent and conducting medium.

TABLE 5

DESIGN IMPLICATIONS

. RELIABILITY	. MEAN TIME BETWEEN FAILURES CONSISTENT WITH MODULE DESIGN LIFE.
. PERFORMANCE	. MAINTENANCE-FREE
. COST	. MINIMUM COST COMMENSURATE WITH MAINTENANCE-FREE, 20-YEAR DESIGN LIFE.
. ELECTRICAL CODE	. COMPLIANCE WITH NATIONAL ELECTRICAL CODE REQUIRED.

TABLE 6

SUMMARIZATION

GENERIC TYPE	DESCRIPTION	ATTRIBUTES
CRIMP	Consists of compressing the crimp barrel of the terminal onto the wire very tightly so that intimate metal-to-metal contact is made. Includes wire joint and butt, parallel and closed splices.	Contact pressure high; joint is mechanically strong; low electrical resistance; crimpong tool is required.
HAND-SOLDERED	Two conductors are joined mechanically, flux is applied, heat is applied, solder is applied - solder bonds and conducts.	Current capabilities throughout the range.
INSULATION DISPLACEMENT	A special tool is used to push a non-stripped wire down between tapered tangs mounted on an insulated board which strips the wire insulation and makes conductor contact.	Rapid and reliable method; main application is computer and communications hardware.
PLUG/RECEPTACLE	A male contact crimped to a conductor which in turn mates to a female contact also crimped to a conductor.	Contact pressure is low; rapid connect/disconnect; environmental durability moderate to excellent.
SCREW TYPE	A metal bolt is screwed to compress a wire or ring/fork tongue terminal to form a joint.	Contact pressure depends on force exerted; current capabilities throughout the range.
SPRING CLIP	A slotted post into which wires may be pushed when the spring is depressed.	Contact pressure moderate; quick connect/disconnect; no tools required.

TABLE 6 (continued)

GENERIC TYPE	LIMITATIONS	
CRIMP	#10 AWG and smaller; environmental durability moderate; inherent insulation available.	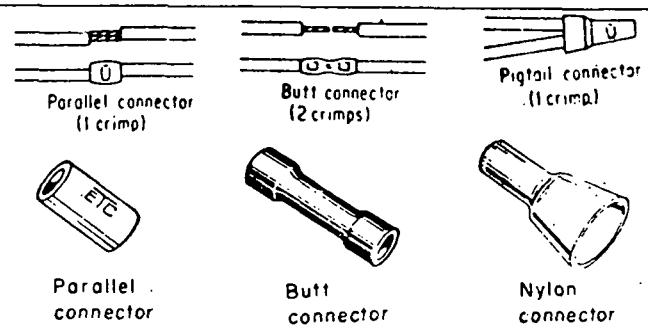
HAND-SOLDERED	Environmental durability moderate insulation required; a high degree of oprator skill required.	
INSULATION DISPLACEMENT	#18 AWG and smaller; environmental durability is untested but exptected to be poor.	
PLUG/ RECEPTACLE	#0 AWG and smaller	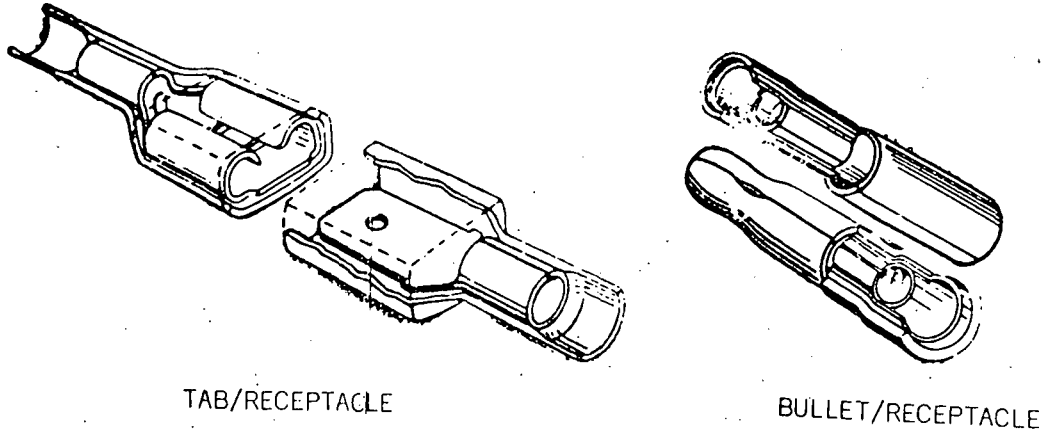

TABLE 6 (continued)

GENERIC TYPE	LIMITATIONS	
SCREW TYPE	Environmental durability poor; insulation/ sealing by using a junction box.	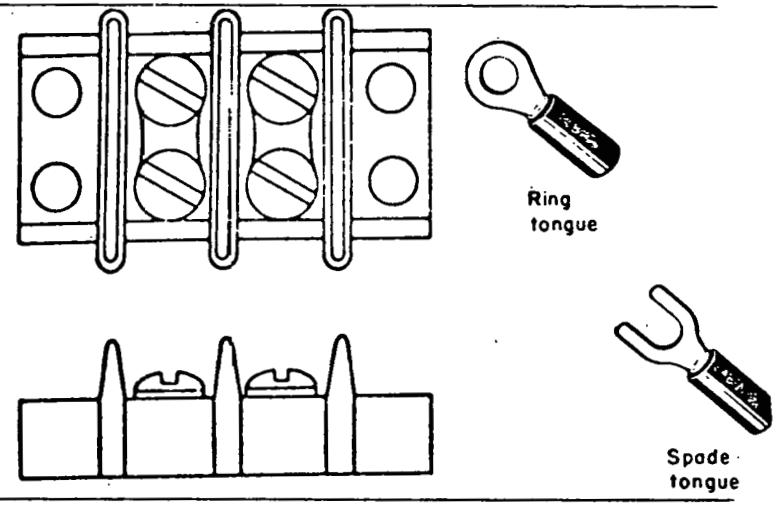
SPRING CLIP	#18 AWG and smaller; environmental durability poor; no inherent insulation or seal.	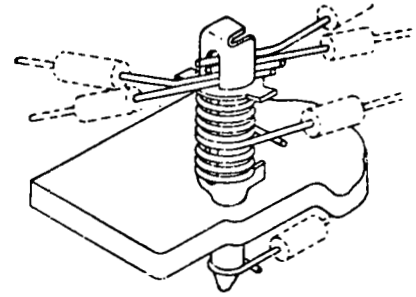 Spring-clip terminal. (*Vector Electronics Co.*)

TABLE 6 (continued)

GENERIC TYPE	DESCRIPTION	ATTRIBUTES
TWIST-ON	An insulated barrel contains a tapered metallic spring which is twisted by hand over two or more wire ends.	Contact pressure is dependent upon force exerted; quick connect/disconnect; no tools required.
WELDED	Electrodes are attached to each conductor and energized, the heat generated fuses the metal conductors together.	Mechanical strength and environmental durability excellent; current capabilities throughout the range.
WIRE WRAP	A machine is used to wrap the conductor around a square post so tightly that metal-to-metal contact is made.	Contact pressure high; major applications include computer and communications hardware.

TABLE 6 (continued)

GENERIC TYPE	LIMITATIONS	
TWIST-ON	#10 AWG and smaller; environmental durability moderate; additional sealing/insulating required	
WELDED	Insulation is required to prevent short circuits; a high degree of operator skill required.	
WIRE WRAP	#18 AWG solid and smaller; environmental durability is untested.	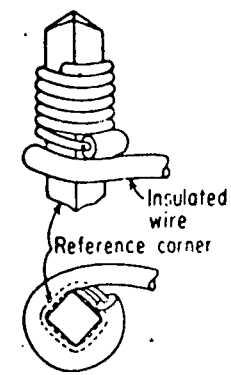 (a) Gardener Denver's Wire Wrap

insulation displacement: a special tool pushes a non-stripped conductor between tapered tangs mounted on an insulated board, which strips off the wire insulation and makes conductor contact with the tangs.

plug/receptacle: a conductor is crimped to a male connector which can be mated to a female connector, which is crimped to another conductor.

screw type: a metal bolt is tightened to compress a conductor to form a connection.

spring clip: a slotted post accepts conductors which are held in place by a spring loaded plate.

twist-on: an insulated barrel containing a tapered metallic spring which is twisted by hand over two or more stripped conductor ends.

welded: conductors are electrically energized and joined together. The resultant heat fuses the metal conductors together.

wire-wrap: a machine wraps the conductor very tightly around a square metallic post.

4.3 Code Implications of Each Termination Type

Butt Splice (Crimped)

Butt splice (crimped) connections are acceptable. All splices must be covered and insulated (NEC Article 110-14).

Insulation Displacement

Insulation displacement is also presently being used in the UL approved prewired systems. Regular piercing type is good up to 24 volts.

Plug/Receptacle

Plug/receptacle connections are acceptable in UL approved prewired systems. They are also acceptable in temporary connections. An effort should be made to gain NEC approval under the special equipment section for sealed quick disconnects composed of pin and socket contacts. Quick disconnects would provide a good inexpensive method of interconnecting photovoltaic modules if definite code approval could be gained. An ANSI/IEEE STD 386-1977, "Separable Insulated Connectors for Power Distribution System Above 600 V," indicates that high voltage separable connectors are being used for interconnecting underground electrical distribution equipment. This standard also states in the forward section that these separable connectors have an enviable safety record.

Screw

Screw type connections are acceptable methods of terminating and interconnecting electrical conductors.

Soldered Connections

Soldered connections are acceptable for UL approved prewired systems. They are not generally approved for field wiring because of the lack of control and inspectability. Solder is acceptable if used in conjunction with a method which makes a mechanically and electrically sound connection without the solder (NEC Article 230-81).

Spring Clip

Would be acceptable in UL approved systems. However, this type of connection is not normally used in the power industry because of small contact area. Therefore, its acceptance would be very much at the discretion of the inspector.

Twist-On

Twist-on connections are acceptable up to a #6 copper wire by NEC.

Welded Termination

Welded terminations are accepted in UL prewired systems. They are also generally accepted by the NEC Article 110-14(b). However, a conversation with an inspector indicated that weld connections may sometimes not be accepted. This is because of the difficulty in determining the quality of a weld, after it has been completed, without a destructive type test.

Wire Wrap

Wire wrap connections without some positive mechanical holding method are presently not approved in the NEC, but are approved as a part of a prewired system with UL approval. Since NEC requires #14 AWG or larger and since #18 AWG wire is the largest wire currently being used for wire wrap, it would be difficult to obtain approval for this termination method. A development, testing, and approval program would be required for the #14 AWG gage and larger wire. Also, since this method requires single strand solid wire, wire flexibility may be a problem. This may be used in small remote applications if contained in a sealed J-Box.

4.4 Electrical and Safety Implications

The electrical and safety implications are distilled and summarized from the appendices into short topic discussions. A summary is provided in Table 7.

The intent and purpose of the codes and standards is to promote the practical safeguarding of persons and the preservation of property. The design of electrical terminations must satisfy this intent at all phases and levels: from the drawing board; through manufacture, installation, and field erection; to operation, maintenance, and repair.

To guard the public against shock hazard arising from accidental contact, the NEC has imposed safety requirements on equipment with exposed terminals whose maximum voltage is 30 Vdc or greater. These requirements will be reflected in a module cost penalty. This limits maximum module voltage levels or restricts termination designs to configurations whose terminals have restricted access or are fully enclosed.

TABLE 7

ELECTRICAL AND SAFETY IMPLICATIONS

DESIGN	. Design of electrical terminations must consider: - safety of lives - preservation of property
VOLTAGE	. Live parts 30 Vdc or greater must be guarded against accidental contact. . Connector insulation breakdown rating to be equal to or greater than module insulation breakdown rating.
GROUNDING	. The system should reflect the benefits of a grounded installation. . Non-current-carrying metal parts must be properly grounded.
CODE ACCEPTANCE	. Approval/disapproval of electrical terminations and interconnections are very dependent on the discretion and code interpretation of individual inspectors. . The use of UL-approved or other laboratory-approved equipment is recommended.
MANUFACTURE	. High voltage equipment should be manufactured in accordance with NEMA/ANSI/IEEE standards.

The purpose of equipment grounding conductors is to provide personnel safety by creating a virtual ground for non-current-carrying conductive parts of the equipment. The requirement for an equipment ground is determined by the materials of construction used in the module.

A system ground, or means to limit maximum voltage with respect to ground, is necessary to prevent insulation breakdown within the module. Consistent with module insulation breakdown level, the insulation breakdown rating of the connector must be equal to or greater than the insulation breakdown rating of the module to ensure a consistent level of safety.

Until photovoltaic modules and systems become commonplace, or until the codes and standards are revised to specifically address photovoltaics, the approval/disapproval of the use of certain electrical terminations and interconnections will be left to the discretion and code interpretation of individual code inspectors with the result that innovative termination design configurations may be totally rejected. To minimize this impact the following activities should be undertaken: 1) work with the NEC subcommittee on photovoltaics to draft requirements for PV module terminations; 2) use termination components which have been tested and approved by nationally recognized testing laboratories and have the entire module tested and approved.

4.5 Cost Tradeoff Implications

This section summarizes termination cost data developed during the study.

Reliability

Consistent with current module design life goals, a preliminary estimate of the MTBF's of the generic terminations were calculated and all were found to exceed the module design life of 20 years. Caution should be used in taking these estimated MTBF's at face value. These values were calculated using military reliability handbook data. Implicit in this data is a detailed termination specification backed up by an aggressive quality control and assurance program. This is not typical of commercial grade termination hardware.

Table 8 shows the results of MTBF calculations and Appendix 5.9 provides assumptions, clarifications, and calculations. Because of the long MTBF's periodic replacement of terminations resulting from the end of the design life are not anticipated. Life cycle termination costs were developed for a "typical" generic termination and consisted of the following:

- Initial terminal (hardware) cost.
- Factory labor to assemble, terminal module interface.
- Field labor to install or attach terminals.
- Sealing material and labor to environmentally protect the termination.

Cost Data

Figure 1 indicates the costs for the nine generic terminations.

Maintenance and repair costs were generated but do not include travel time, fault detection time, or preparation time. Figure 2 provides a comparison of maintenance and repair costs. Appendix 5.8 provides additional information assumptions, and labor rates.

The factors which affect termination costs are: manufacturing material, equipment, and labor; installation labor, skill, and equipment; and sealing material and labor.

Comparing cost data for the three top rated terminations, the first striking difference is in initial cost, with crimp at $0.08, plug/receptacle at $0.32, and screw type at $0.98. The crimp and screw type terminations are quite simple and have been in production for a considerable length of time. Also, they are both manufactured in large quantities. It is, therefore, unlikely that any manufacturing cost could be greatly reduced. The plug/receptacle termination type, however, is relatively new on the market and perhaps could benefit by some manufacturing cost reduction in the future.

The major cost drivers in the screw type of termination, besides initial cost, are material cost and factory and field labor costs associated with the use of a junction box for satisfactory environmental sealing. There are ways to reduce junction box-associated costs, such as an elastomeric junction box with

TABLE 8

RESULTS OF MTBF CALCULATIONS

TERMINATION TYPE	SINGLE TERMINATION MTBF HOURS
Wire Wrap[1]	1.33×10^{11}
Crimp[1]	6.41×10^{8}
Insulation Displacement	6.22×10^{8}
Welded[1]	2.56×10^{8}
Hand Solder[1]	1.28×10^{8}
Plug/Receptacle[1]	1.00×10^{8}
Twist-On	2.28×10^{6}
Screw	2.24×10^{6}
Spring Clip	1.96×10^{5}

[1] - MTBF based on failure rates determined from MIL-HDBK 217C, all others determined by parametric data.

FIGURE 1

FACTORY AND FIELD ASSEMBLY-COSTS FOR TERMINATION TYPES
RESIDENTIAL APPLICATIONS

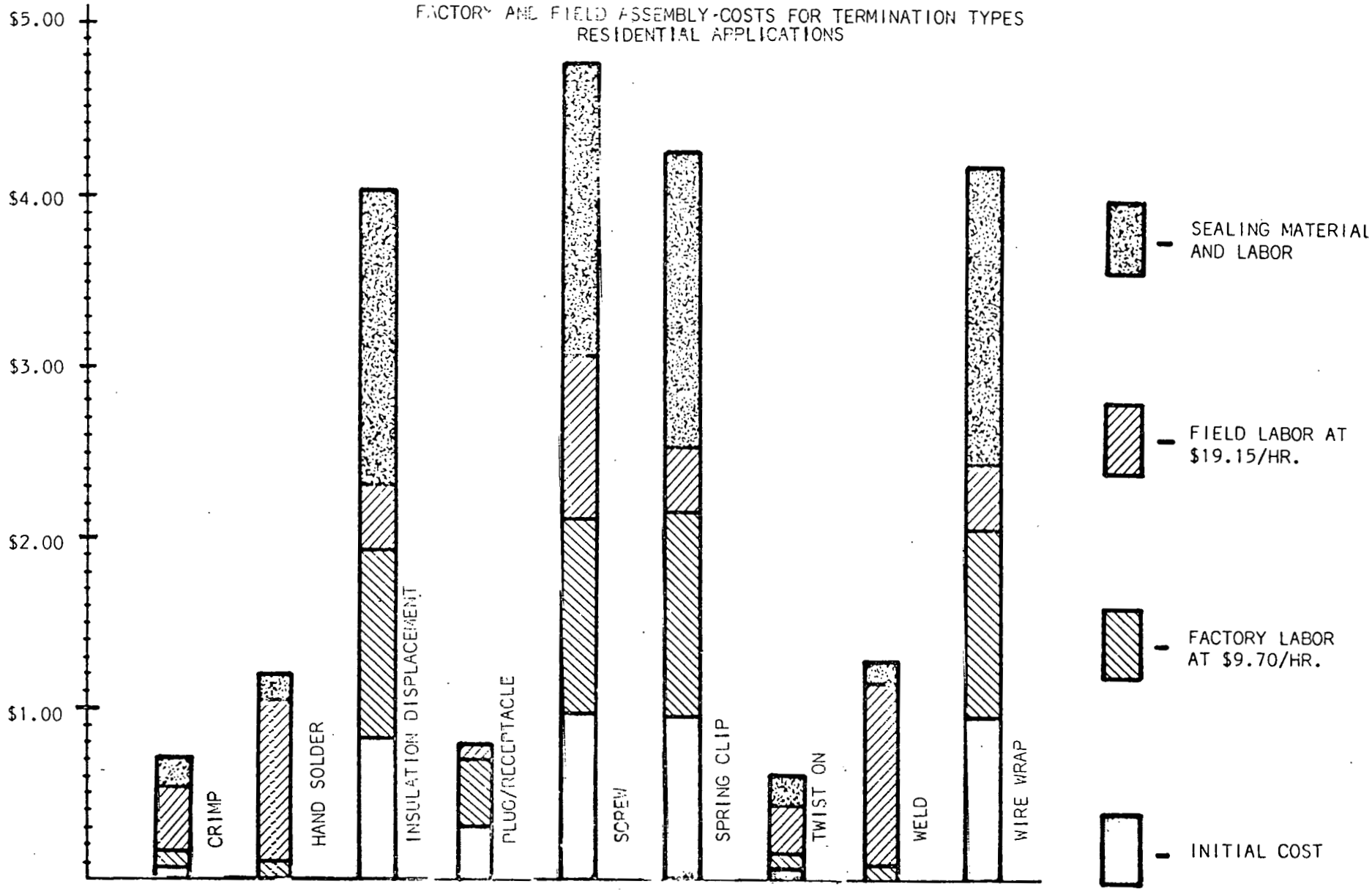

FIGURE 2

FIELD TERMINATION REPLACEMENT DUE TO TERMINATION FAILURE

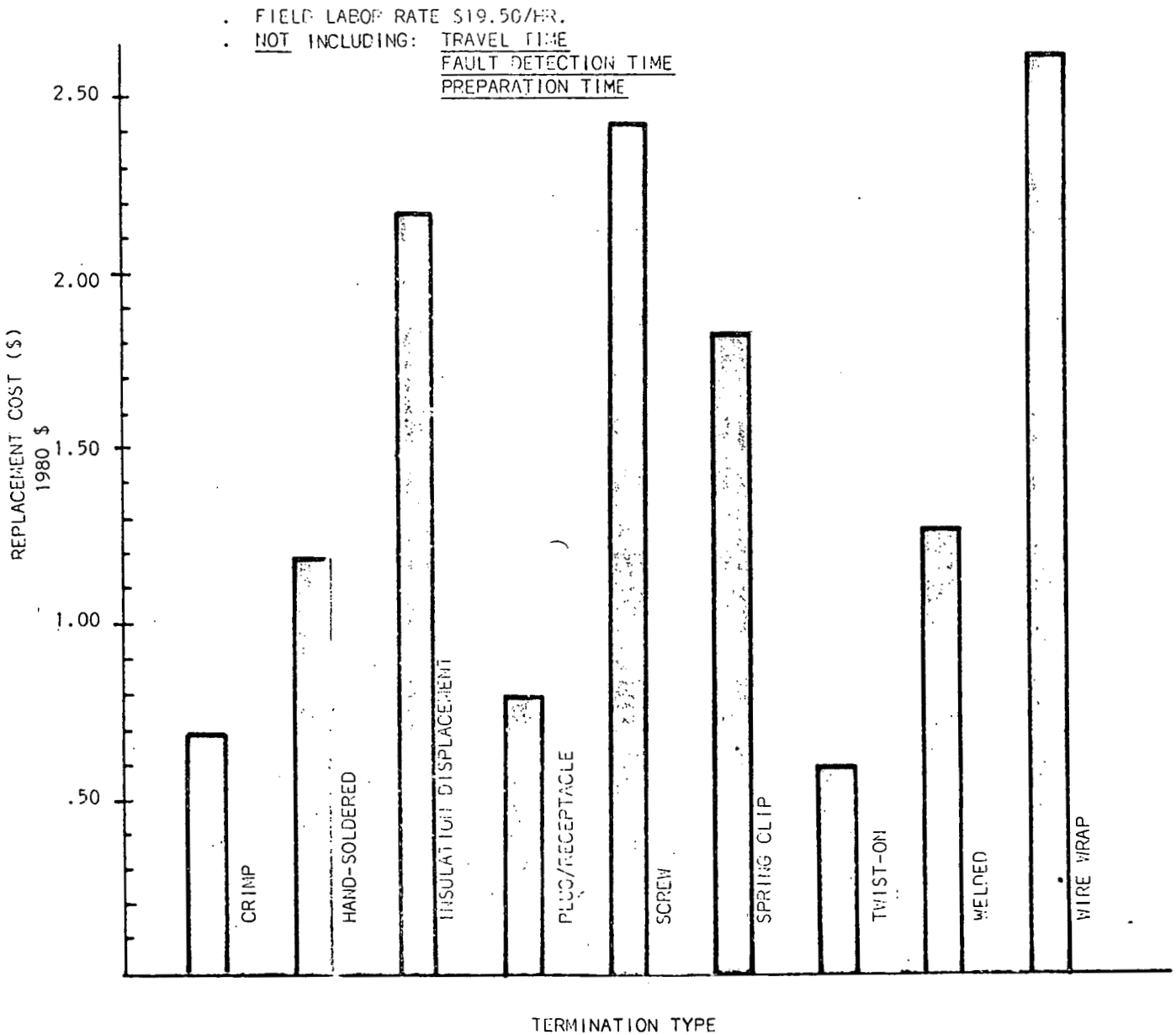

screw terminals (terminal block) molded into it, or having the junction box be part of the module or support frame (which would eliminate attachment labor). Another possible way to reduce cost while addressing the "sealing" problem is to manufacture a boot or shroud that slipped over (or otherwise attached to) a standard terminal block, effectively isolating the terminals from the environment, and eliminating the need for a junction box. Such a cover is not currently manufactured, but if available, would be considerably less expensive than a junction box.

Field labor is high due to the considerable amount of time involved in making the electrical connections and re-attaching the lid of the junction box.

The major cost driver that could be feasibly reduced in the crimp type of termination is the labor involved in sealing the termination. This could be resolved by re-designing the crimp termination to include some sort of tight-fitting collar at the conductor entry end(s) of the crimp termination. A butt splice termination utilizing this type of sealing might look like the following, Figure 3.

The cost drivers identified in the plug/receptacle type of termination are the high initial cost and high factory labor content (installation). These cost drivers seem to be inherent in the plug/receptacle type of termination.

During the investigation only one termination was found to be specifically identified for use with photovoltaic modules. It is Amp, Inc., Solar Module Connector. Although it has just become commercially available, a brief description is included because it represents one manufacturer's answer to the module-termination-selection question. The connector, shown in Figure 4, consists of a bus bar, bus bar housing, and harness connector. The bus bar and bus bar housing act as the module interface and, when connected to the harness connector, is inherently sealed.

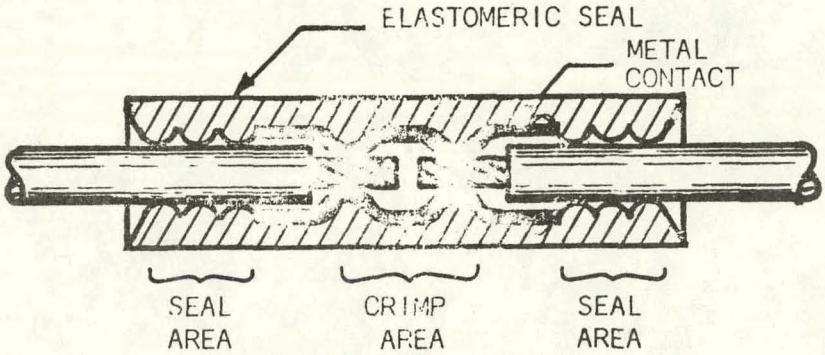

FIGURE 3: SUGGESTED CRIMP TERMINATION SEAL

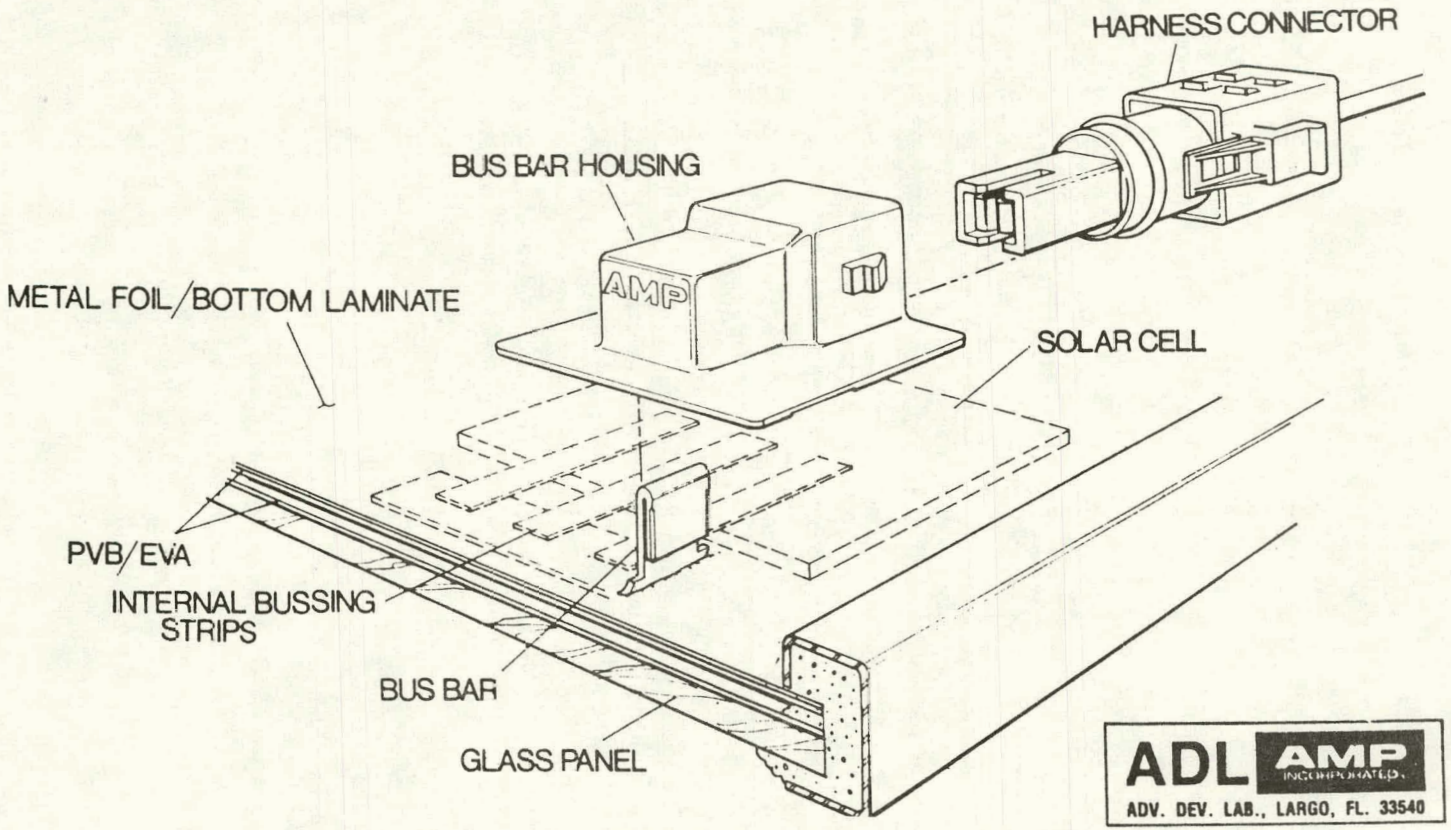

FIGURE 4

AMP INC., SOLAR MODULE CONNECTOR

CONCLUSIONS

Conclusions of the study are that:

1. MTBF's for existing generic terminations were found to exceed the module design life of 20 years.

2. Code interpretation by individual inspectors is likely to vary due to the lack of guidelines. Product approval by nationally recognized testing laboratories will aid in minimizing this effect.

3. Terminations must comply with the National Electrical Code requirements.

4. A review of current codes and standards found that some of the generic terminations are not addressed.

RECOMMENDATIONS

Recommendations are that:

1. Manufacturers be encouraged to design/develop electrical terminations specifically for photovoltaic use.

2. Close interfacing with code agencies incorporating electrical standards of photovoltaics into the system.

NEW TECHNOLOGY

No reportable items of new technology have been identified during the study.