In: *Proceedings of the Flat-Plate Solar Array Project Research Forum on Quantifying Degradation* (December 6-8, 1982, Williamsburg, Virginia), JPL Publication 83-52, JPL Document 5101-231, DOE/JPL-1012-89, Jet Propulsion Laboratory, Pasadena, California, June 1, 1983, pp. 155-170.

ANALYTICAL MODELING OF GLASS FRACTURE

D. Moore

Jet Propulsion Laboratory
California Institute of Technology
Pasadena, California 91109

The need for a straightforward method of determining the thickness of glass required for solar collector panels subject to pressure loads is evident. These panels must sustain wind, earthquake, ice, snow and dead-weight loads, all of which may be characterized as pressure loads. On the face of it, this problem appears deceptively simple: Calculate the stress in the plates and compare that stress with the strength of glass. The difficulties in adopting this classical method of structural analysis are described below:

It is well known that plates loaded normal to their plane develop substantial mid-thickness membrane tension at moderate loading. This results in a non-linear stiffening effect as the plate is loaded beyond the point at which the center deflection is about one-half the plate thickness. The stress and deflection of plates subject to moderate to high pressure loads are significantly lower than predicted by linear theory, which assumes that these loads are resisted solely by bending stresses. Until recently, however, solutions for the stress and deflection of rectangular plates in the non-linear regime were unavailable. To complicate matters further, the practical strength of large glass parts is difficult to ascertain. The strength of the glass depends more on the kind and number of flaws in the surface of the glass than on the inherent strength of the glass.

These considerations led early window-glass researchers to develop empirical glass-thickness selection methods based on the breakage of a large number of pressure-loaded glass plates of various sizes and thicknesses. Typically, these empirically developed curves show the glass thickness versus glass area required to sustain a one-minute wind load with a failure rate of 8 windows per 1000. Use of these glass thickness recommendations for the design of glass plates used in solar collector panels has several limitations. Because solar collector panels are tilted from the horizontal, loads of long-time duration such as dead weight, snow and ice are applicable to their design. The window-glass thickness charts are intended primarily for wind loads of short duration. Also, design for failure rates other than 8 per 1000 is not considered.

Recently, a number of researchers, recognizing the need for better glass thickness selection tools, have been reworking this problem. Jet Propulsion Laboratory (JPL), Pittsburgh Plate Glass Industries, Inc.(PPG), and Texas Tech University (TTU) published glass-thickness selection procedures or theoretical glass failure prediction models in 1979 and 1980. These methods and models all use finite element or other state-of-the-art analytical procedures to solve the non-linear problem to obtain an accurate prediction of the state of stress in the plate. These models differ chiefly in their treatment of glass breakage strength. This presentation discusses JPL's glass-thickness sizing method.

The method follows the conventional theme of structural analysis already mentioned. Stress in the plate is accurately calculated and compared with the glass breakage stress determined as a function of load duration, area of the plate and the desired failure rate at the design load.

An extensive nonlinear finite element analysis of rectangular plates has been performed using the ARGUS structural-analysis program design curves have been developed. These curves yield center deflection, center stress and corner stress as a function of a dimensionless parameter that describes the load intensity. Results are included for plates having length-to-width ratios of 1, 1.5, 2, 3 and 4. The load range considered extends to 1000 times the load at which the behavior of the plate becomes significantly nonlinear. This shows that the stress and deflection are markedly lower at higher loads than predicted by linear theory. These results are to be in excellent agreement with the analytical and experimental results of other investigators. It remains to establish a rational means of ascertaining a glass breakage strength that can be compared with the stress in the glass obtained from the design curves.

While the theoretical strength of silica glass is of the order of 1 million $lb/in.^2$, and glass fibers approach this value, the average strength of large glass parts is known to depend almost entirely on the surface condition of the glass, that is, the number and size of flaws and the residual surface compression (temper) in the glass. Stress concentrations at the tips of these flaws are not relieved by plastic yielding. For this reason, glass parts always fail in tension when these flaws grow under sustained loading to some critical size. This glass-failure model explains why long load durations and large surface areas decrease apparent glass strength, whereas residual surface compression increases apparent glass strength. This model also explains why apparently identical glass samples fail at widely different loads. Those samples with more and larger flaws can sustain less load.

A large body of glass-breakage data has been analyzed by this author, including data on more than 2000 broken glass plates reported by five investigators or organizations: R. Bowles and B. Sugarman, R.L. Hershey and T.H. Higgins (Libby-Owens-Ford Co.), Ontario Research Foundation, B. Jonsson, and Texas Tech. The stress-versus-load nomographs already developed were used to convert this data from pressure load at breakage to applied stress at breakage. Least-squares curve-fitting techniques are used to develop functional relationships of breakage stress versus load duration, glass surface area, and plate length-to-width ratio. These relationships are then used to normalize all breakage stress data to that stress that a 1-m-square plate would sustain for a 1-min load. Weibull-type curves are fitted to the normalized data to obtain a functional relationship between glass strength and failure probability. In the form of design curves, these analyses permit the designer to estimate the glass breakage strength applicable to his use.

In summary, the designer compares the applied stress obtained as a function of pressure load and plate dimensions with the glass breakage strength obtained as a function of load duration, glass surface area, length-to-width ratio, and acceptable failure rate.

Overview

Objective:

- Thickness sizing of rectangular glass panels subject to pressure loads

Background:

- Non-linear behavior of pressure-loaded plates
  - Tensile membrane stresses at mid-thickness
  - Less deflection and stress than linear theory
- Statistical nature of glass breakage

Current Window Design Practice:

- Empirical curves for glass thickness and area vs load for 8 per 1000 failure rate

Recent Developments:

- PPG, TTU, JPL – 1980
- Good estimate of stress obtained by non-linear FEM
- Statistical methods applied to glass breakage strength

Glass Thickness Sizing Method

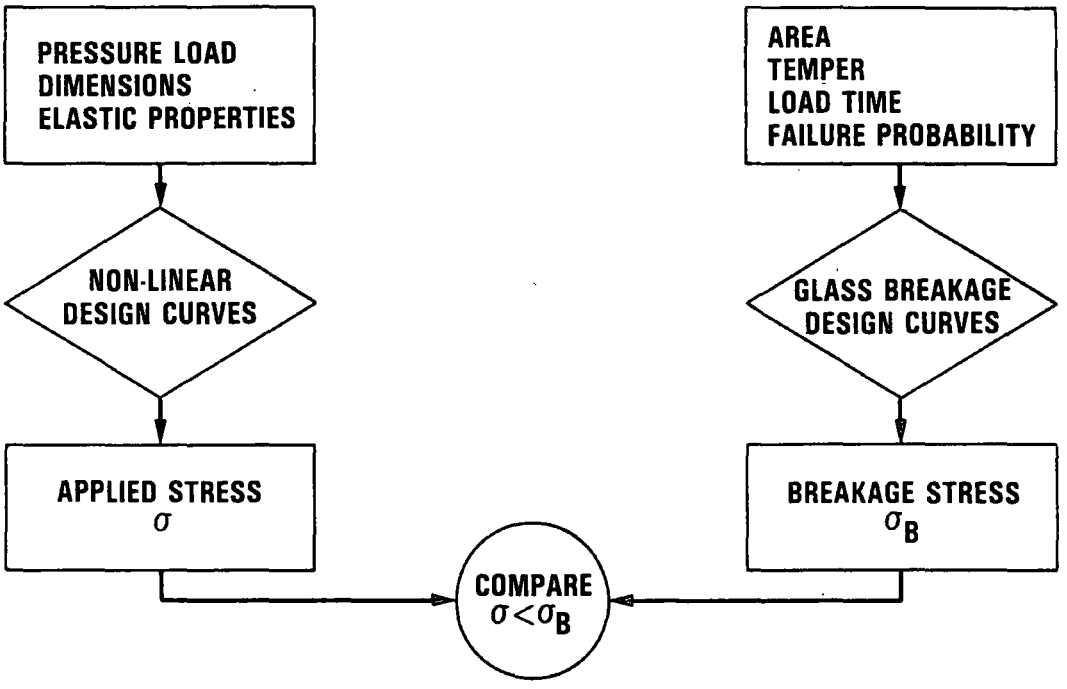

Uniformly Loaded, Simply Supported Rectangular Plate

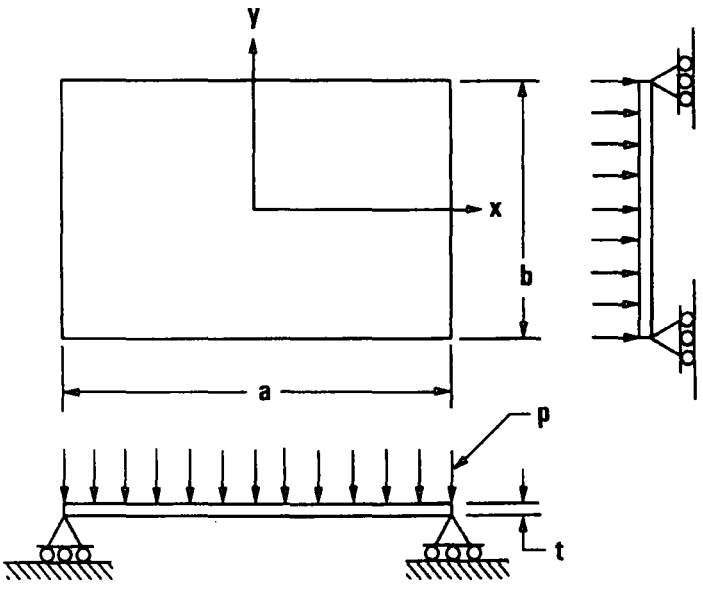

a = LENGTH OF PLATE

b = WIDTH OF PLATE

t = THICKNESS OF PLATE

p = PRESSURE

E = YOUNG's MODULUS

ν = POISSON's RATIO

Maximum Principal Stress Contours

CONVEX SIDE OF 60 × 96 × .225 in. SIMPLY-SUPPORTED
GLASS PLATE WITH UNIFORM NORMAL PRESSURE OF .2 lb/in.^{2}
STRESS CONTOURS LABELED IN lb/in.^{2}

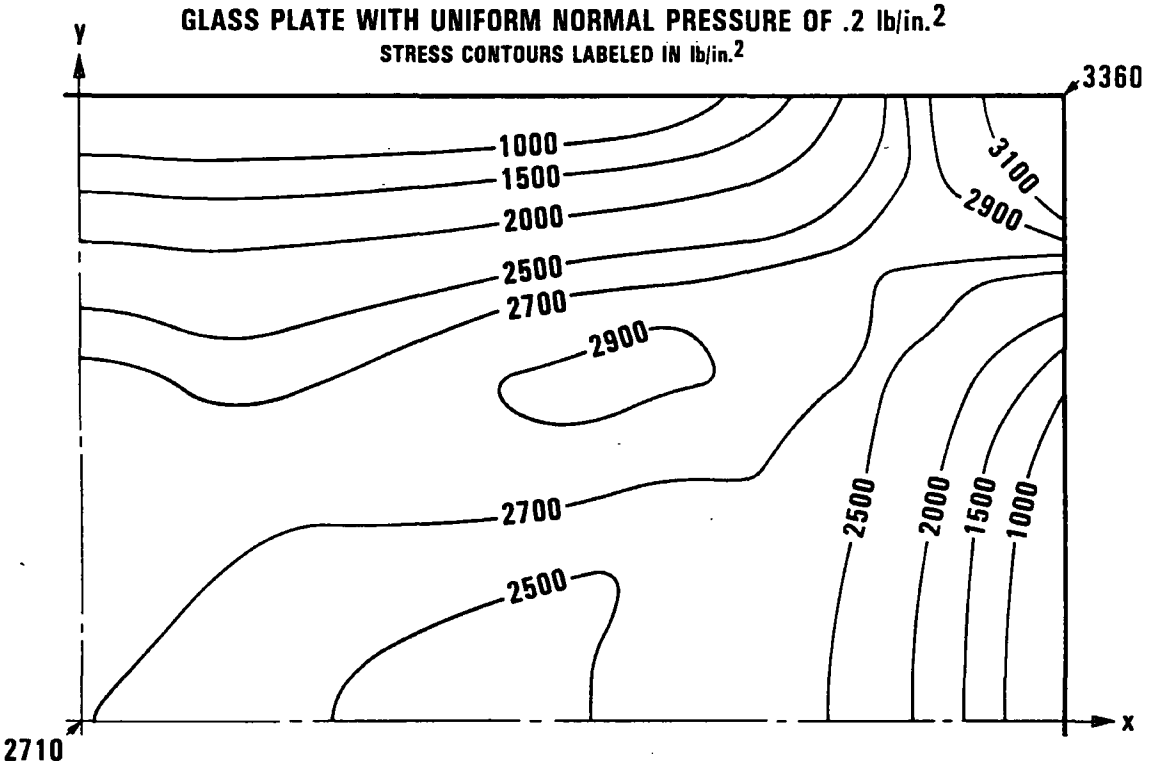

CONVEX SIDE OF 60 × 96 × .225 in. SIMPLY-SUPPORTED
GLASS PLATE WITH UNIFORM NORMAL PRESSURE OF .4 lb/in.^{2}
STRESS CONTOURS LABELED IN lb/in.^{2}

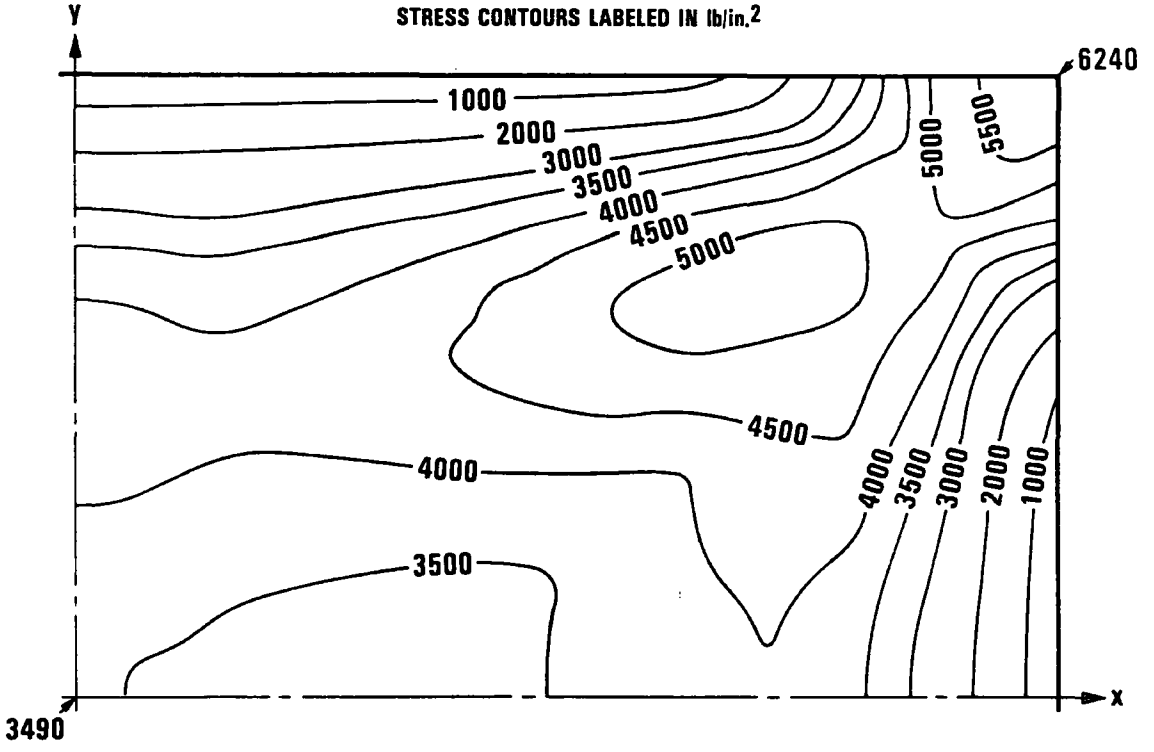

Maximum Principal Stress Contours

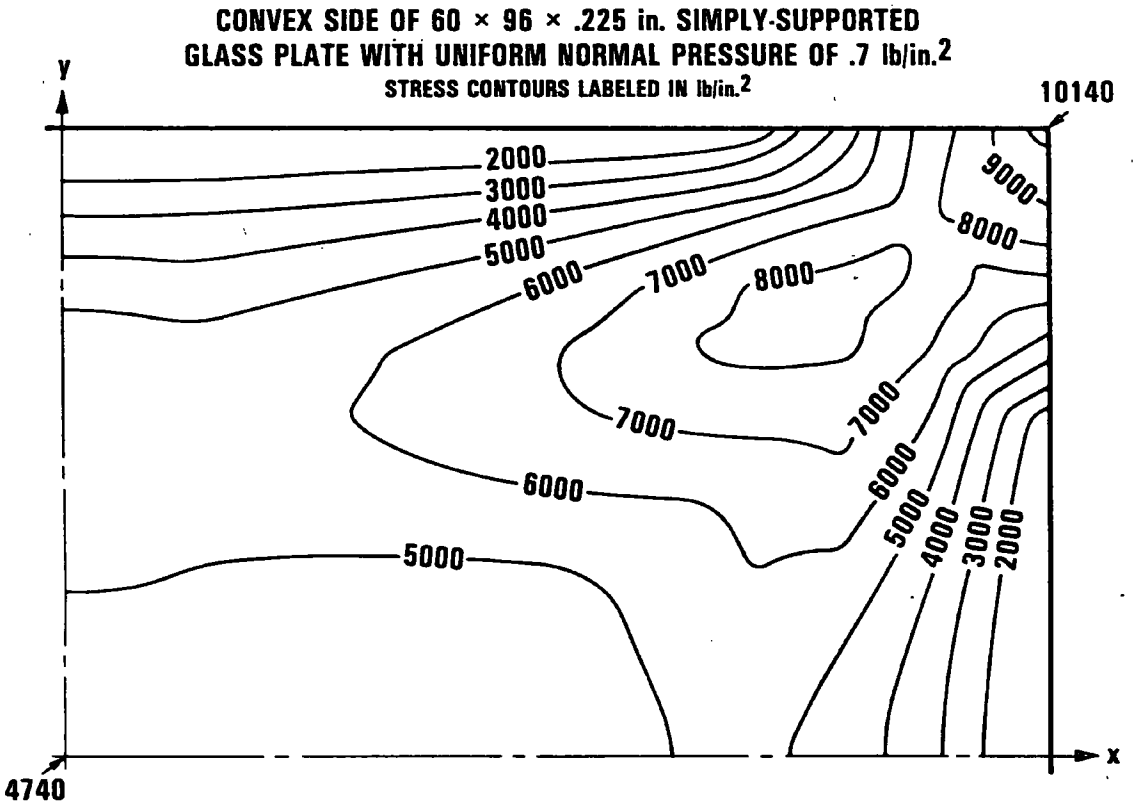

Deflection vs Load

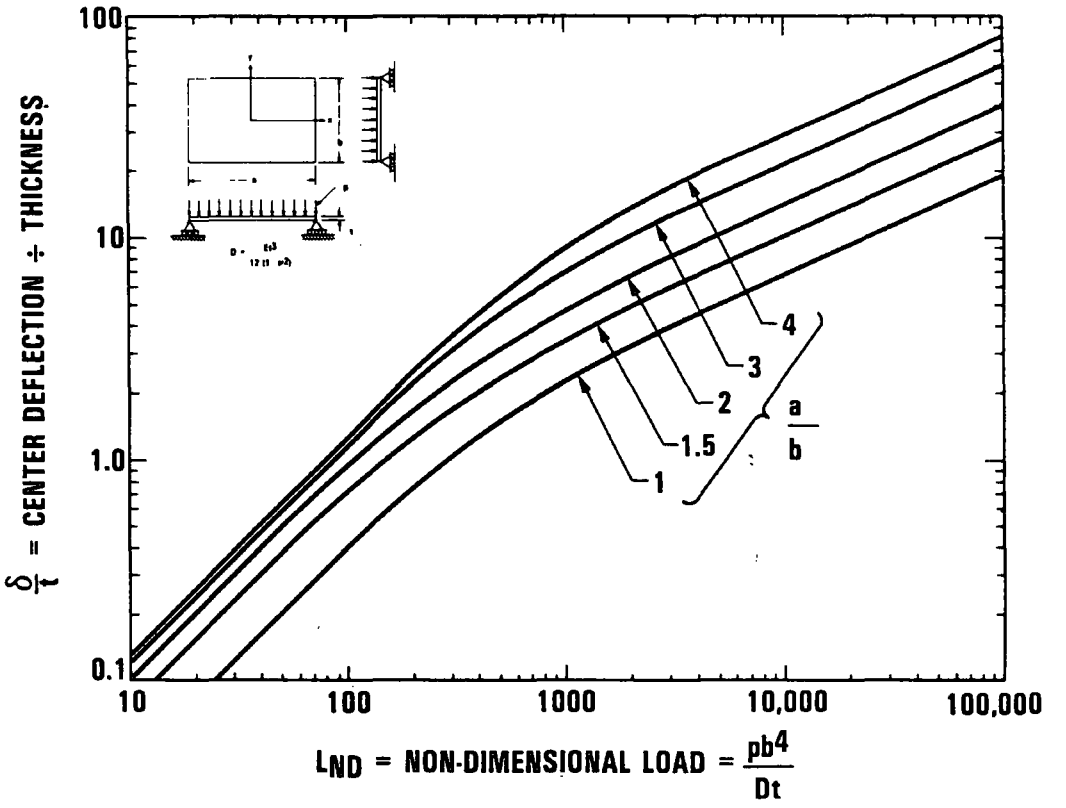

Stress vs Load

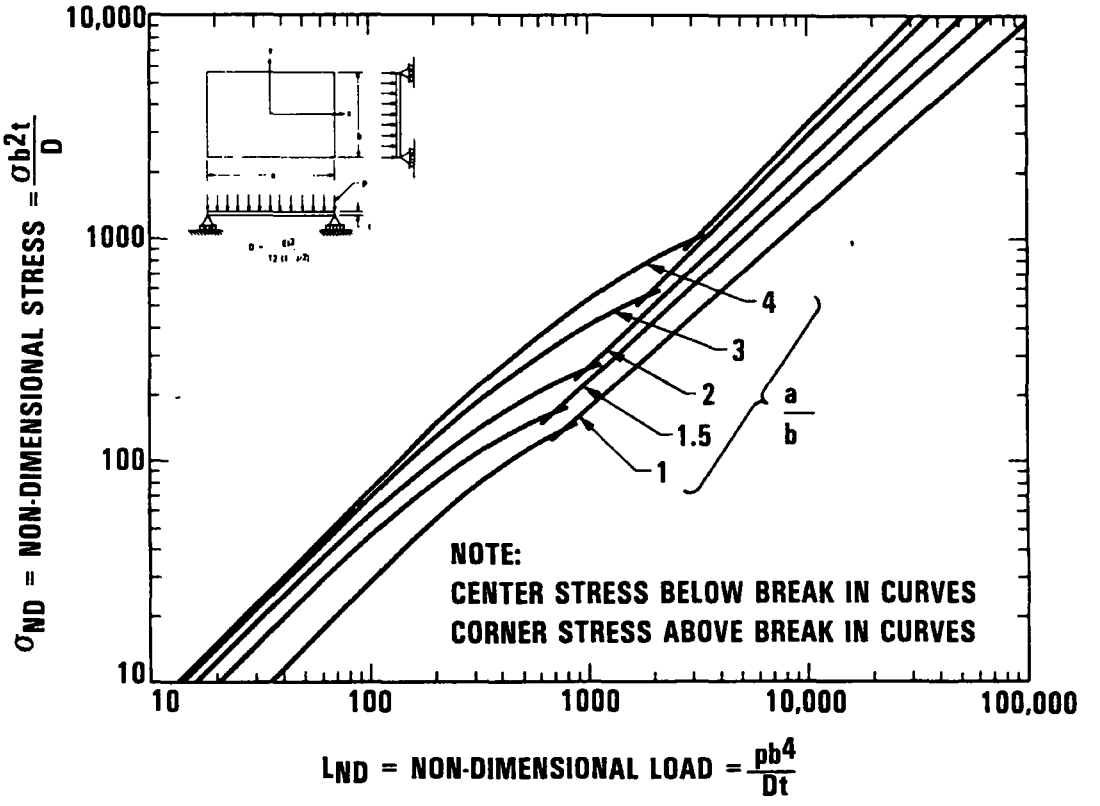

Glass Breakage Strength

Brittle failure mechanism

- Fails in tension at flaws
- Inherent strength ≈ 1,000,000 lb/in.^{2}
- Apparent strength ≈ 10,000 lb/in.^{2}

Depends On:

- Load duration time
- Surface area of plate
- Length/width ratio of plate
- Probability of failure

Approach:

- Analyze existing glass breakage data
- Least-squares curve fitting:
  $\sigma_B = f(\tau, A, P_f)$
- Weibull statistical analysis:
  $\sigma_B = f(P_f)$

Glass Breakage Data

SOURCE	SIZE	TOTAL NO. ANALYZED
Bowles and Sugarman	41 × 41 × .110 TO .373 in.	220
Texas Tech (TTU)	16.3 × 19.8 × .125 in. 28.5 × 60.5 × .219 in.	50 10
Ontario Research Foundation (ORF)	60 × 96 × .225 in.	120
Libbey Owens Ford	30 × 48 × .090 in. TO 120 × 168 × .312 in.	1300
Swedish Data	39.4 × 39.4 × .118 in. TO 66.9 × 66.9 × .236 in.	600
		2300

Glass Breakage Stress vs Time to Break: ORF Phase II Data, Manufacturer B

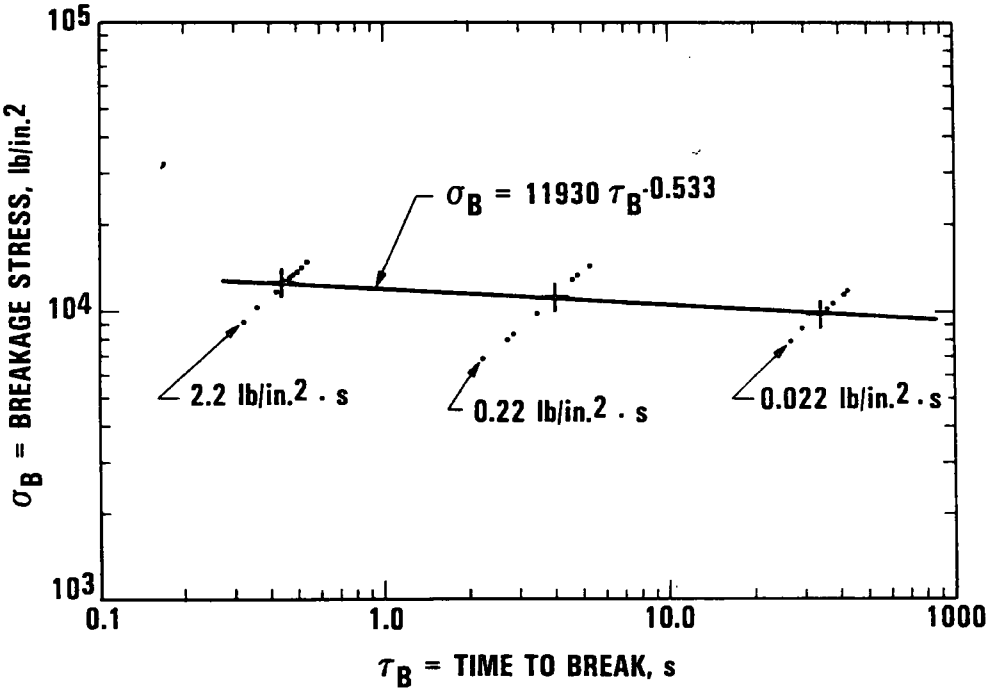

Fraction of 1-min Strength vs Load Duration

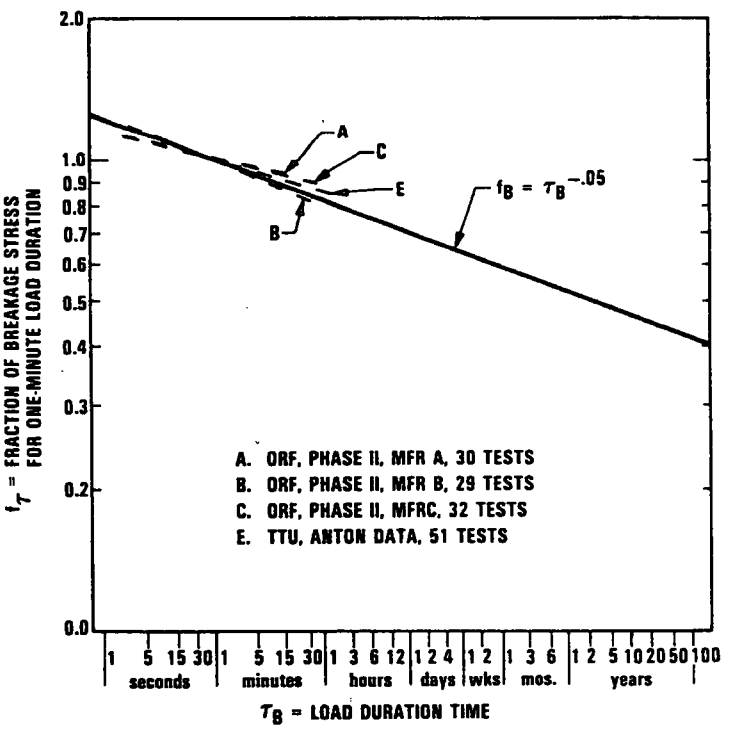

Average 1-min Breakage Stress vs Area of Plate

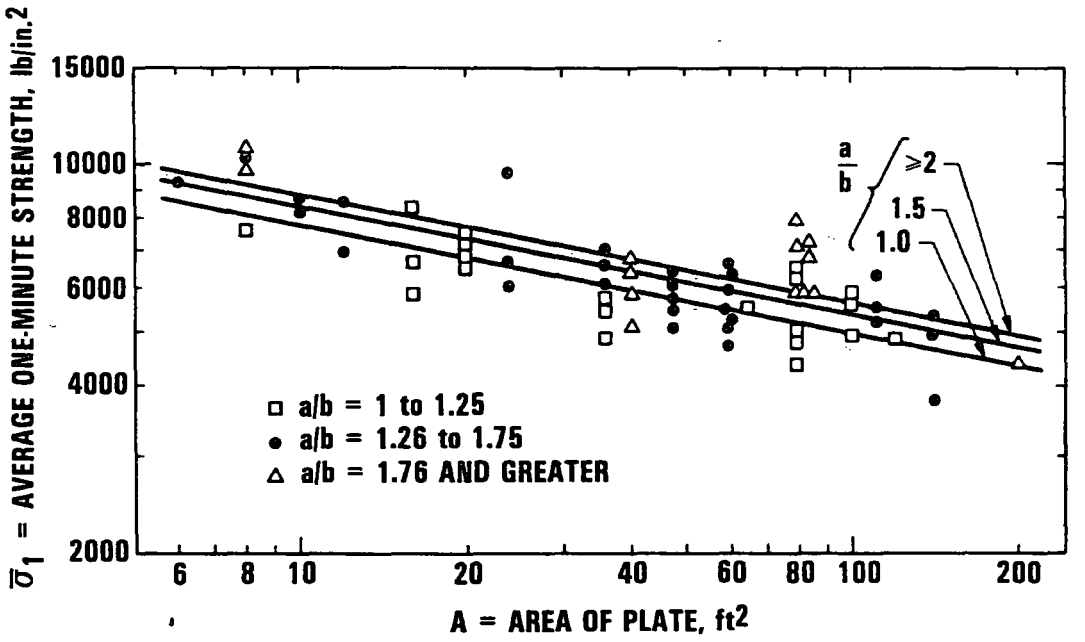

Fraction of Strength of 1 x 1-m Plate vs Area of Plate

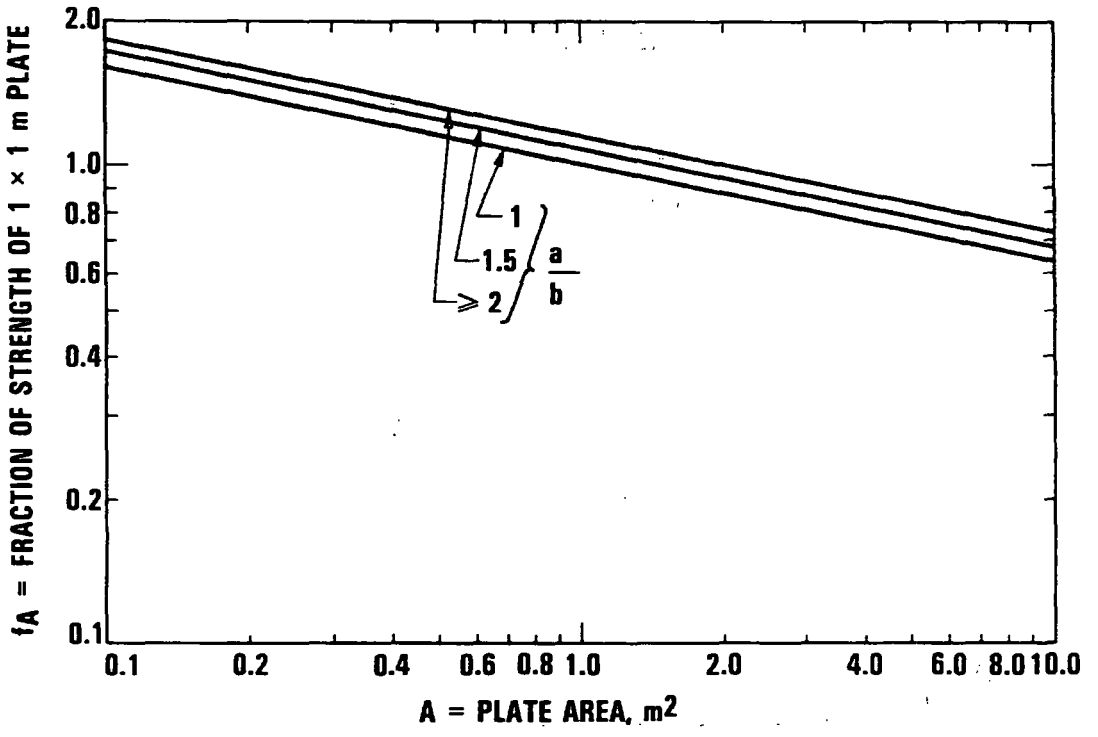

Glass Strength vs P_f

$$P_f = 1 - e^{-\left(\frac{\sigma_{11} \cdot \sigma_u}{\sigma_0}\right)^m}$$

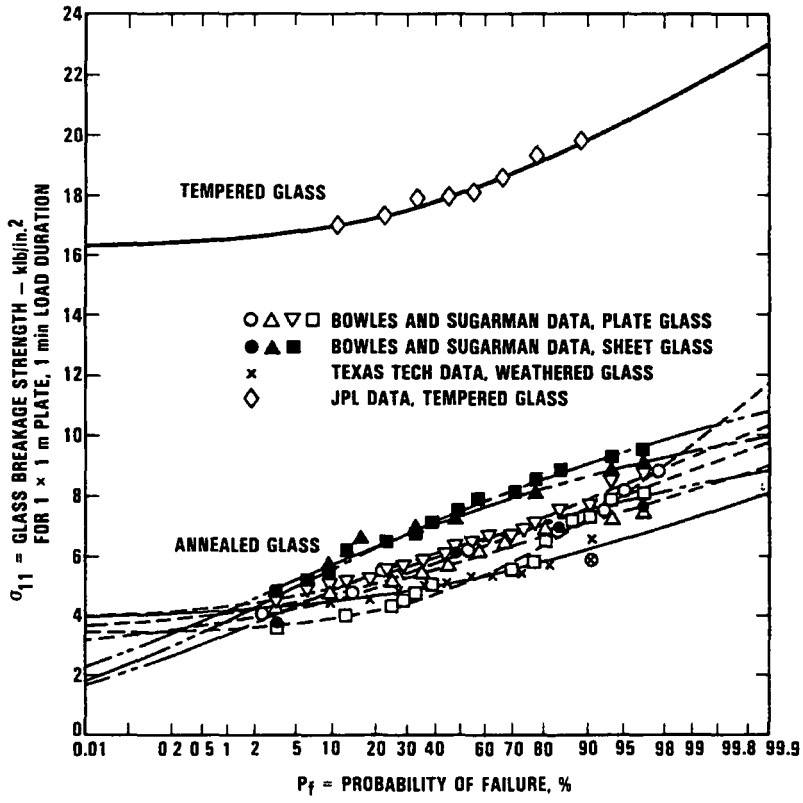

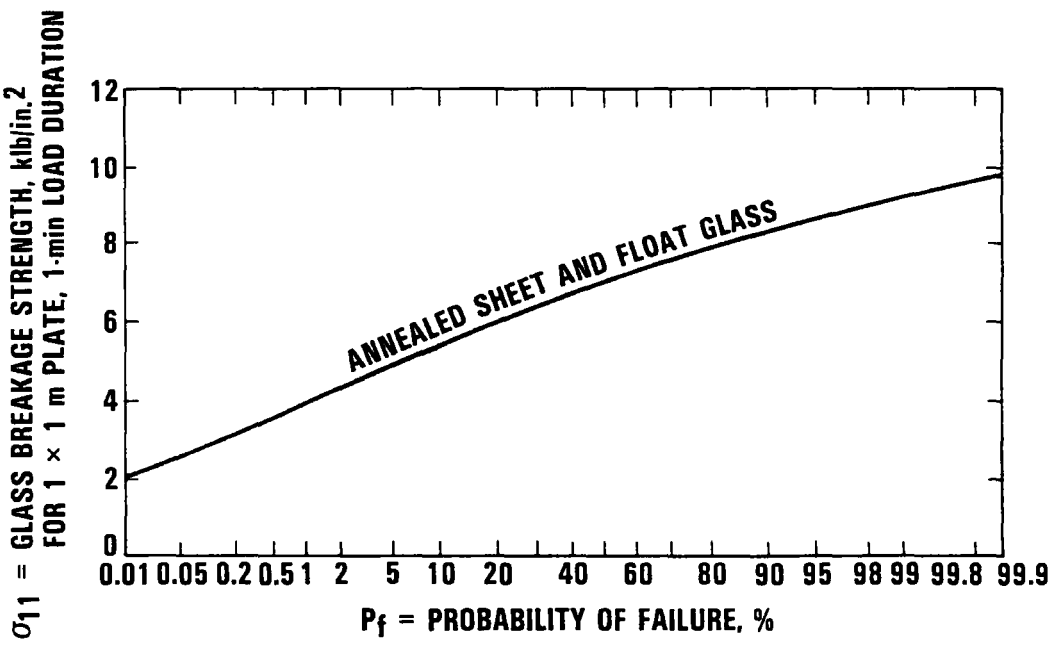

Sample Problem

48 in. × 48 in.
50 lb/ft^2
1000-min LOAD DURATION

HEAT-STRENGTHENED GLASS
3500 lb/in.^{2} SURFACE COMPRESSION
$P_f = 0.01$

DETERMINE APPLIED STRESS

$a = 48$ in.
$b = 48$ in.
$t = 0.125$ in.

$P = 0.3472$ lb/in.^{2}
$E = 10{,}000{,}000$
$\nu = 0.22$

$$D = \frac{Et^3}{12\,(1 - \nu^2)} = 1710$$

$$L_{ND} = \frac{pb^4}{Dt} = 8620$$

$\sigma_{ND} = 1120$ (FROM CURVE)

$$\sigma = \frac{D}{b^2 t}\sigma_{ND} - \sigma_{RC} = 6650 - 3500 = 3150 \text{ lb/in.}^2$$

DETERMINE GLASS BREAKAGE STRESS

$\sigma_{11} = 3850$
$f_T = 0.71$
$f_A = 0.93$

$\sigma_B = f_T\, f_A\, \sigma_{11} = 2540$

COMPARE
$3150 > 2540$
NG

DISCUSSION

WHITE: When you did this step, you said you cycled the pressure; you put pressure on, took it off and put pressure on it again?

MOORE: We didn't do the glass breakage test. I was just trying to make a case for the reasonableness of the design problem.

WHITE: But your model is based on cycling the pressure?

MOORE: No, it's based on a degradation of the total area under the stress time curve.

WHITE: So basically you have a constant stress or pressure on the glass?

MOORE: You can have either one you would like.

LANDEL: Let me try a clarification. The analysis which you had was for a steady load.

MOORE: That's right.

LANDEL: And you are asking what happens when you change the load. So now you have your load which is time-to-break. Is that going to change under a cyclic loading condition or is that the same load lifetime curve?

MOORE: That's a good question and it is best explained by an equation I had written in red on one of these viewgraphs, and that is the basic equation that researchers are using to show the equivalents of different time bearing loads. You take the stress versus time function to the power alpha. Now the power alpha happens to be the slope on the curve that I showed for the log time curve and it is actually the inverse of that slope and is of order 16 to 20--this alpha here--so you take that and you integrate. You first take your stress/time function to the alpha power and then you integrate between time zero and the time-to-break and that will be a constant. What it means is that dynamic loads have a much longer equivalent. In other words, if you had a ramp load, it could have about 16 times as long to fail as a step-function load. For any cyclic load, you will have less area under this curve. It will take a great deal more total time to fail the plate than if you just put the load on all at once and let it sit there until it broke.

LANDEL: Other questions?

D'AIELLO: You mentioned that the breakage of the glass is statistical. Could you comment on the differences between tempered glass of various kinds versus untempered glass with regard to the statistical distributions found?

MOORE: The only test data I have on tempered glass was done at JPL by Abe Wilson. There seems to be less variability with tempered glass and it also seems that there is some minimum stress, probably the residual stress, below which that glass simply will not fail. In other words, if you don't exceed the residual stress in the glass you will never have the tensile stress in the glass and there is no reason for the glass part to

fail at all. You should have zero probability of failure if you do not exceed the residual compressive or the so-called glass temper.

LANDEL: Do you have an idea what that residual stress might have been in that sample? We could deduce it, if your argument is correct. Do you have any independent evidence? Only here we have the specification which calls for greater than 3200 lb/in^2.

MOORE: In the case of tempered glass, it is greater than 10,000. The federal specification calls for greater than 10,000 lb/in^2 for tempered glass.

LEE: I believe you mentioned one of your data sets that you analyzed was on weathered glass from the Ontario group. What were the conditions of weathering and what was the net effect of the weathering on your analyses?

MOORE: The one weathered glass sample that is shown on this viewgraph is the one defined by this cross and it has reduced the average strength of the glass, but it also has reduced the variability, so that even though the average strength is down, its strength at a low probability of failure, at least according to this type of curve fitting, suggests that the strength at 1% probability of failure is higher than some samples of brand-new glass. Other investigators have noticed this before and they said that abraded glass--if you take glass and abrade it by sandblasting it--you will reduce the mean strength but you will also reduce the variability. They didn't say it was stronger, they just said that you would reduce the mean strength and the variability of the strength.

LANDEL: I have a question relating to the underlying procedure. In your case, you described this as a non-linear problem--this is a structural non-linearity, to distinguish it from Labana's case, where he was talking about non-linear material behavior in elastomers. Now in this case, since you are now going to consider deflections large enough to reach non-linearity, does the addition of encapsulant in cells, etc., influence the stress distribution enough to influence these results particularly?

MOORE: We looked at sandwiches early in this program and the modulus which is below 1000 lb/in^2 or so.

LANDEL: Which is in the region in which you saw it was appropriate to avoid cell cracking?

MOORE: Right. Then it is very hard to make the skin that is separated by that sandwich. Again, also if the sandwich is reasonably thick, the design curves that Ed (Cuddihy) and Alex (Garcia) have been working on--I will point to that--so if the encapsulant is fairly thick and has a low modulus, you won't influence the stress in the structural member--that is, the glass.

LANDEL: A second question about the Weibull analysis itself. If that applies, then there should be a direct relationship between a curve such as this independent of normalization and the actual volume of the material. Is the distribution itself a function of the volume of the sample? Did you use that in the normalization?

MOORE: Yes. The volume is implicit in the surface area of the plate.

LANDEL: Yes. But it seemed to me, and I wasn't sure about this, that you took the data and normalized things to a unit area--

MOORE: Yes. To a unit area.

LANDEL: But in fact, that relationship should be a part of the parameters of the Weibull distribution, and I was wondering if you had used that as well?

MOORE: No, we didn't.