5101-164
Low-Cost
Solar Array Project

Interim Standard for Safety: Flat-Plate Photovoltaic Modules and Panels

Volume I: Construction Requirements

February 20, 1981

Prepared for
U.S. Department of Energy
Through an agreement with
National Aeronautics and Space Administration
by
Jet Propulsion Laboratory
California Institute of Technology
Pasadena, California

Prepared by the Jet Propulsion Laboratory, California Institute of Technology, for the Department of Energy through an agreement with the National Aeronautics and Space Administration.

The JPL Low-Cost Solar Array Project is sponsored by the Department of Energy (DOE) and forms part of the Photovoltaic Energy Systems Program to initiate a major effort toward the development of low-cost solar arrays.

This report was prepared as an account of work sponsored by the United States Government. Neither the United States nor the United States Department of Energy, nor any of their employees, nor any of their contractors, subcontractors, or their employees, makes any warranty, express or implied, or assumes any legal liability or responsibility for the accuracy, completeness or usefulness of any information, apparatus, product or process disclosed, or represents that its use would not infringe privately owned rights.

FOREWORD

Underwriters Laboratories, Inc., under contract to the Jet Propulsion Laboratory (JPL), has conducted a study of present photovoltaic module array designs and configurations likely to be used in residential, commercial, and industrial applications. That investigation of engineering safety requirements has resulted in the development of this Interim Standard for Safety.

This document, primarily written by Underwriters Laboratories, Inc. (UL), is published in two volumes. Volume I, Construction Requirements, contains safety requirements for flat-plate photovoltaic modules and panels. Volume II, Performance Requirements, contains test procedures and methods to verify compliance with the safety requirements set forth in Volume I.

The purpose of these documents is to offer to the flat-plate photovoltaics community, for trial use, this Interim Standard for Safety as part of JPL's Low-Cost Solar Array (LSA) Project.

Volume I is intended to be used on a trial basis with the latest Block V Module Procurement Specifications for Intermediate Load and Residential Applications, 5101-161 and 5101-162, respectively. This use will support such things as future module procurements and module development activities sponsored by the U.S. Department of Energy.

Volume II contains test methods currently defined within the above module specifications together with additional tests under consideration by Underwriters Laboratories, Inc. Volume II is not intended for immediate use, but is designed to serve as a focus for review and iteration of future tests.

The results of feedback on these volumes will be submitted to UL for further refinement and ultimately for publication as a standard containing basic requirements for products covered by UL under its Follow-Up Service.

TABLE OF CONTENTS

Volume I Construction Requirements

1. Introduction 1

2. Scope 1

3. Glossary 2

4. Units of Measurement 3

5. Components 3

6. General 3

7. Insulating Materials and Systems 6

8. Current-Carrying Parts 6

9. Wiring and Wireways 7

10. Connection Means 7

11. Bonding for Grounding 9

12. Spacings 11

13. Weatherproof Compartments 12

14. Corrosion Resistance 13

15. Edges 15

16. Accessibility 15

17. Fire Resistance 17

18. Encapsulant 17

19. Heating 18

20. Dielectric Voltage Withstand 20

Figure

16-1. Probe for Determining Accessibility of Live Parts 16

Tables

6-1. Torque Requirements 5

12-1. Minimum Acceptable Spacings at Wiring Terminals 12

12-2. Minimum Acceptable Spacings Elsewhere Than at Wiring Terminals 12

19-1. Maximum Temperature 18

1. INTRODUCTION

1.1 Interim Standard for Safety, Flat-Plate Photovoltaic Modules and Panels, Volume I, contains interim safety construction requirements for photovoltaic modules and panels. The requirements are considered to be compatible with system safety considerations and requirements as identified by building and electrical codes, such as the National Electric Code (NEC).

1.2 The scope is limited to safety aspects of module and panel construction. In some cases the need to address certain additional areas is recognized, but the specific requirement(s) have not yet been formulated. Areas under consideration, but not addressed in this document include:

(1) Requirements that would provide an additional margin of safety in handling panels and in wiring the array during installation, operation and maintenance.

(2) Requirements for double insulation.

(3) Requirements for specific wire color-coding.

Note: text in brackets [ ] is commentary.

2. SCOPE

2.1 These requirements cover flat-plate photovoltaic modules and panels intended for installation on or integral with buildings or to be free-standing (i.e. not attached to buildings) in accordance with the National Electrical Code and model building and codes. [Recognizing that the present edition of the NEC does not specifically address photovoltaics, reference to the NEC is in conjunction with a future edition of the NEC.]

2.2 These requirements cover modules and panels intended for use in systems with a maximum voltage of 1000 volts to ground.

2.3 These requirements also cover components intended to provide electrical connection to, and mounting facilities for, flat-plate photovoltaic modules and panels.

2.4 These requirements do not cover equipment intended to accept the electrical output from the array, such as power conditioners (inverters) and batteries, nor do they cover any tracking mechanism.

2.5 These requirements do not cover receivers, nor do they cover optical concentrators.

2.6 These requirements do not cover combination photovoltaic-thermal modules or panels.

3. GLOSSARY

3.1 Air Mass -- The ratio of the mass of the atmosphere in the actual earth-sun path to the mass that would exist if the sun were directly overhead, at sea level.

3.2 Ampacity -- Current-carrying capacity in amperes.

3.3 Array -- A mechanically-integrated assembly of modules and panels, together with support structure and foundation, tracking, thermal control, and other components, as required to form a dc power-producing unit.

3.4 Branch Circuit -- As distinguished from the National Electrical Code definition, a number of modules or paralleled modules connected in series to provide dc power at the system voltage.

3.5 Cell -- The basic photovoltaic device that generates electricity when exposed to sunlight.

3.6 Encapsulant -- The insulating material enclosing the solar cells and cell interconnects.

3.7 Interconnect -- A conductor within a module which provides a mechanism for conducting electricity between cells.

3.8 Fill Factor -- The ratio of the maximum power available from a photovoltaic element (cell, module, etc.) to the product of the open circuit voltage and short circuit current.

3.9 Metallization -- Electrically conductive metal coating on the surface of a solar cell.

3.10 Module (Flat-plate) -- The smallest complete, environmentally protected, essentially planar assembly of solar cells, designed to generate dc power under unconcentrated terrestrial sunlight.

3.11 Nominal Operating Cell Temperature (NOCT) -- The equilibrium solar cell junction temperature corresponding to nominal module service operating conditions in a standard reference environment of 80 mW/cm^2 irradiance, 20°C ambient air temperature, 1 m/s wind, and electrically open circuit.

3.12 Panel (Flat-plate) -- A collection of modules fastened together, pre-assembled and wired, designed to provide a field-installable unit.

3.13 Receiver -- The component designed to operate under concentrating sunlight, incorporating the concentrator cell assembly, and providing thermal energy removal.

3.14 Temperature, Ambient Air -- The temperature of the air immediately surrounding the object being tested.

4. UNITS OF MEASUREMENT

4.1 If a value for measurement as given in these requirements is followed by an equivalent value in other units, in parentheses, the second value may be only approximate. The first stated value is the requirement. SI units as employed are in accordance with the American National Standard for Metric Practice, ANSI/ASTM E380.

5. COMPONENTS

5.1 A component of a product covered by this standard shall comply with the requirements for that component and shall be used in accordance with its recognized rating and other limitations of use. A component need not comply with a specific requirement for the component that involves a feature or characteristic not needed in the application of the component in the product covered by this standard.

6. GENERAL

6.1 A module shall be completely assembled when shipped from the factory. A panel may be completely assembled when shipped from the factory, or may be shipped in subassemblies, but no active electrical part shall be smaller than a module.

Exception: Assembly parts need not be affixed to the module at the factory.

6.2 A module or panel shall exclude water during and as a result of exposure to rain, if the entrance of water may result in (1) the direct or indirect entrance of water into a building structure, or (2) the wetting of uninsulated live parts of the module or panel or (3) water in enclosures (e.g., the wiring compartment) above the lowest live part (except insulated wire).

6.3 Assembly instructions shall be provided with a product shipped in subassemblies, and shall be detailed and adequate to the degree required to facilitate total assembly of the product.

6.4 Photovoltaic modules and panels shall include provision for secure mounting to a supporting surface or frame. A bolt, screw, or other part used to mount a component of the module or panel shall not be used for securing the complete device to the supporting surface or frame.

6.5 A photovoltaic module or panel shall be capable of being mounted, without performance degradation, on a structure or surface which exhibits a maximum out-of-plane condition of 20 mm/m (¼ inch/foot).

> Exception: Flexible panels restricted to mounting in prescribed frames need be evaluated only when mounted in such frames.

6.6 A module or panel shall be capable of being incorporated into the final assembly without requiring any alteration unless specific details describing necessary modification(s) for alternate installation(s) are provided in the installation instructions. Where modules or panels must bear a definite relationship to each other for the intended installation and operation of the array (e.g., to allow connectors to mate), they shall be constructed to permit them to be incorporated into the array in correct relationship with each other without the need for alteration.

6.7 The design of the product shall be such that during installation it shall not be necessary to alter or remove any covers, baffles, insulation or shields which are required to: (1) prevent excessive temperatures, or (2) guard against accidental contact with hazardous energy parts.

> Exception: A cover of a wiring compartment allowing access to hazardous energy terminals may be removed to allow for the making of electrical connections.

6.8 Adjustable or movable structural parts shall be provided with locking devices to prevent accidental shifting, if any accidental shifting is likely to result in a hazard.

6.9 In locations that may be wet or moist, metals shall not be used in contact in combinations where failure of either metal is likely to result in the product's noncompliance with any other requirement in this standard.

6.10 An electrically active screw head or nut on the underside of an insulating base shall be prevented from loosening, and shall be insulated or spaced from the mounting surface. This may be accomplished by:

(1) Countersinking such parts not less than 1/8 in. (3.2 mm) in the clear and then covering them with a waterproof, insulating sealing compound that does not flow or creep at a temperature 15°C (27°F) higher than its normal operating temperature in the device, and at not less than 65°C (149°F) in any case, or

(2) Securing such parts and insulating them from the mounting surface by means of a barrier or the equivalent, or by means of through-air or over-surface spacings as required elsewhere in this standard.

6.11 If failure of a part, detachable, hinged or the like, for routine maintenance, would result in the product's noncompliance with any other requirement in this standard, the part shall be capable of withstanding 300 removals and replacements without resulting in breakage of parts or making the part incapable of functioning in the intended manner. Where screws are used to secure parts, they shall be capable of being tightened to and released from the values given in Table 6-1.

6.12 A wire-binding screw or nut on a wiring terminal shall be capable of withstanding 10 torquings to and releasing from the values given in Table 6-1

Table 6-1. Torque Requirements

Screw Size	Torque lb-in.	(N-m)
No. 6	10	(1.1)
No. 8	20	(2.3)
No. 10	25	(2.8)
1/4 in.	100	(11.3)
5/16 in.	200	(22.6)
3/8 in.	350	(39.5)
7/16 in.	550	(62.1)
1/2 in.	800	(90.4)
9/16 in.	1200	(135.6)

without damage to the terminal supporting member, or loss of continuity or short circuiting of the electrical circuit to accessible metal.

6.13 Any accessible part of the completed module or panel shall be capable of withstanding the application of a 20 pound (89 Newton) force applied by a ½ inch (12.7 mm) diameter rod, the end of which is rounded to a ½ inch (12.7 mm) diameter hemisphere without resulting in the development (transitory or permanent) of accessible parts involving a risk of electric shock.

7. INSULATING MATERIALS AND SYSTEMS

7.1 Insulating systems for the support and/or insulation of uninsulated live parts shall be capable of withstanding the most severe conditions likely to be met in service. Among the characteristics required is the ability to resist degradation caused by ultraviolet radiation, salt fog, beating rain, elevated temperatures, and impact.

7.2 Cell encapsulating systems and materials shall afford physical barriers against contact by persons with the cells, interconnects, and other live parts and shall provide insulation between these parts and any part of the module which is accessible per paragraph 16.3.

7.3 Polymeric encapsulating materials shall not be used in compression where creep of the material under the pressure could reduce the insulation level to less than the required value.

7.4 A barrier or liner of electrical grade fiber providing the sole insulation between live parts and accessible metal parts or between uninsulated live parts not of the same potential shall be not less than 0.028 in. (0.71 mm) thick. The barrier or liner shall be held in place and shall not be adversely affected to the extent that its necessary properties may fall below the minimum values required for the application.

7.5 A barrier or liner of polymeric insulating material providing the sole insulation between live parts and accessible metal parts or between uninsulated live parts not of the same potential shall be of adequate thickness for the application. The barrier or liner shall be held in place and shall not be adversely affected to the extent that its necessary properties may fall below the minimum values required for the application.

8. CURRENT-CARRYING PARTS (INCLUDING INTERNAL WIRING)

8.1 A current-carrying part (including a wire) shall have the mechanical strength and ampacity necessary for the service.

8.2 Wiring of modules and panels shall be insulated and acceptable for the purpose, considering temperature, voltage, and conditions of service to which the wiring is likely to be subjected within the equipment. Aluminum conductor wire shall not be used where there is a possibility of water accumulation, if it is in contact with other materials that could cause galvanic action.

8.3 A splice shall be provided with insulation equivalent to that required for the wires involved.

8.4 Joints and connections shall be mechanically secure and shall provide adequate and reliable electrical contact without strain on connections and terminals. Soldered connections involving interconnects need not have additional mechanical security when held in place in rigid encapsulation systems.

8.5 An uninsulated live part (including a terminal) shall be secured to its supporting surface by a method other than friction between surfaces so that it will be prevented from turning or shifting in position if such motion may result in reduction of spacings to less than those required in Tables 12-1 and 12-2.

8.6 A lead and its attachment intended for field connection, or otherwise likely to be handled in the field, shall be capable of withstanding, for one minute without damage to itself or the module or panel, a force of 15 lb (66.7 newtons) applied in any direction permitted by the construction.

8.7 The wiring of a photovoltaic module or panel shall be so located that after installation of the product in the intended manner it will not be exposed to the degrading effects of the direct UV component of sunlight.

9. WIRING AND WIREWAYS

9.1 Enclosures for wire shall be smooth and free from sharp edges, burrs, or the like that may damage the insulation or conductors.

10. CONNECTION MEANS

10.1 In Paragraphs 10.2 through 10.8, connection means are considered to be those to which field-installed wiring is connected when the product is installed.

10.2 Photovoltaic modules and panels shall be capable of accommodating at least one of the acceptable wiring systems described in the National Electrical Code (NEC) for photovoltaics. Recognizing that the present edition of the NEC does not specifically address photovoltaics, this paragraph is for application in conjunction with a future edition of the NEC.

10.3 Photovoltaic modules and panels shall be provided with wiring terminals, connectors or leads to accommodate current-carrying conductors.

10.4 The connection means of a photovoltaic module or panel shall be so located that after installation of the product in the intended manner they will not be exposed to the degrading effects of the direct UV component of sunlight.

10.5 A lead that is intended to be spliced in the field to a circuit conductor in accordance with the National Electrical Code shall not be smaller in size than No. 18 AWG and the insulation shall not be less than 1/32 in. (0.8 mm) in thickness.

10.6 The free length of a lead for field connection shall be greater than 6 in. (152 mm). [A minimum of 6 in. is necessary to make a field wiring connection.]

10.7 Binding screw terminals for connection means shall meet the following requirements:

(1) The threaded screw or stud shall be nonferrous metal, shall not have more than 32 threads per inch, and shall not be smaller than No. 8 for accommodating No. 10 or No. 12 AWG wire and not smaller than No. 6 for accommodating No. 14 AWG and smaller wire. A wire-binding screw or stud-and-nut-type terminal shall be provided with upturned lugs, a cupped washer, barriers, or other equivalent means, to hold the wire(s) in position even though the screw or nut becomes slightly loose. A wire-binding screw shall be capable of being properly tightened by the use of a flat-blade screwdriver. The head of a wire-binding screw for accommodating No. 12 AWG or smaller wire shall have a minimum diameter of 0.275 in. (7.0 mm) and that of a screw for accommodating No. 10 AWG wire shall have a minimum diameter of 0.327 in. (8.3 mm).

(2) The tapped terminal plate shall be of nonferrous metal, shall have not less than two full threads, and shall be of metal not less than 0.050 in. (1.27 mm) thick for accommodating a wire larger than No. 14 AWG and not less than 0.030 in.

(0.76 mm) thick for accommodating a No. 14 AWG or smaller wire. Threads provided by extruding a hole for tapping will be counted if the thickness of the unextruded metal is not less than the pitch of the thread.

10.8 A wiring terminal shall comply with the requirements of Paragraph 6.12.

10.9 Wire connectors intended to accommodate copper conductors only shall comply with the requirements in the Standard for Wire Connectors and Soldering Lugs for Use with Copper Conductors, UL 486A. Wire connectors intended to accommodate aluminum and copper conductors shall comply with the requirements for wire connectors for use with aluminum conductors, UL 486B.

NOTE: Although requirements covering means for accommodating aluminum wire have been included, such wiring method may in fact be unacceptable due to the potential consumption (galvanic corrosion) of the aluminum conductors or overheating of the connections.

10.10 A termination of a photovoltaic module or panel intended to accommodate a current-carrying conductor shall be identified by a marking:

"+" or "POS" or "POSITIVE"	OR	"-" or "NEG" or "NEGATIVE"

10.11 The space within a wiring enclosure of photovoltaic modules and panels shall provide ample room for the distribution of wires and cables required for the proper wiring of the product.

11. BONDING FOR GROUNDING

11.1 Bonding shall be such that when a current equal to twice the module or panel short-circuit current is caused to flow through the grounding path, the voltage across the path shall not exceed one volt.

11.2 If the entire frame (any and all parts) is implied or considered to be for the connection of the grounding conductor, that is, no point is marked "G", etc. (see paragraph 11.11 to 11.14) the judgement of paragraph 11.1 is to be made with the current flowing between any part of the frame and any other part of the module or panel.

11.3 A photovoltaic module or panel shall have provision for frame grounding, if constructed with exposed dead metal parts. The grounding means shall be bonded to each exposed part of the module or panel that is likely to be energized by a single insulation failure.

11.4 External metal frames, mounts, and the like, shall be bonded by a positive means, such as clamping, riveting, bolted or screwed connections, or welding, soldering or brazing. Materials in soldered or brazed connections shall have a softening or melting point greater than 455°C (833°F). The bonding connection shall penetrate nonconductive coatings, such as paint or vitreous enamel.

11.5 A bolted or screwed connection that incorporates a star washer under the screwhead or a serrated screwhead is acceptable for penetrating nonconductive coatings. If the bonding means depends upon screw threads, two or more screws or two full threads of a single screw shall engage the metal.

11.6 Splices shall not be employed in wire conductors used for bonding.

11.7 All joints in the bonding path shall be mechanically secure independent of any soldering.

11.8 A bonding conductor shall be of copper, a copper alloy, or other material acceptable for use as an electrical conductor. Ferrous metal parts in the grounding path shall be protected against corrosion by metallic or nonmetallic coatings, such as painting, galvanizing or plating. A separate bonding conductor or strap shall: (1) be protected from mechanical damage, and (2) not be secured by a removable fastener used for any purpose other than bonding for grounding unless the bonding conductor is unlikely to be omitted after removal and replacement of the fastener.

11.9 Metal-to-metal hinge bearing members are considered to be a means for bonding a door or panel for grounding, if a multiple-bearing pin-type hinge(s) is employed.

11.10 Any act of routine maintenance of the module or panel shall not involve breaking or disturbing the bonding or grounding path.

11.11 A terminal of a photovoltaic module or panel (e.g., wire-binding screw, pressure wire connector, nut-on-stud) intended to accommodate an equipment grounding conductor shall be identified by the legend "G," "GR," "GROUND," "GROUNDING," or the like, or shall have a green-colored part. No other terminal shall be so identified.

11.12 If a legend is used as the identifier, the legend shall be located on or adjacent to the terminal, or on a wiring diagram affixed to the module or panel near the terminal.

11.13 If a green-colored terminal part is used as the identifier, it shall be readily visible during and after conductor installation, and that portion of the terminal part bearing the green color shall not be readily removable from the remainder of the connector.

11.14 A lead of a photovoltaic module intended for the connection of an equipment grounding conductor shall be identified by insulation colored green, or green with yellow stripe. No other lead shall be so identified.

12. SPACINGS

12.1 Spacings between uninsulated live parts not of the same potential, and between live parts and accessible metal parts, shall be not less than those indicated in Tables 12-1 and 12-2.

Exception: These spacing requirements do not apply to the inherent spacings of a component, such spacings being judged on the basis of the requirements for the component in question.

12.2 The spacings at a field-wiring terminal are to be measured with and without wire of the appropriate size (for the rating) connected to the terminal as in actual service. The connected wire (if the terminal will accommodate it properly and the product is not marked to restrict its use) is to be the next larger size than would normally be required.

12.3 Enamel-insulated and similar film-insulated wire is considered to be an uninsulated live part in determining compliance with the spacing requirements in this standard.

12.4 Surfaces separated by a gap of 0.013 in. (0.33 mm) or less are considered to be in contact with each other for the purpose of judging over-surface spacings.

12.5 In Tables 12-1 and 12-2, the potential involved is the maximum voltage which may exist between parts, in any anticipated use of the module or panel.

Table 12-1. Minimum Acceptable Spacings at Wiring Terminals

Potential Involved volts	Through Air and Over Surface in.	(mm)
0-50	1/4	(6.4)
51-300	3/8	(9.5)
301-600	1/2	(12.7)
601-1000	5/8	(15.9)

Table 12-2. Minimum Acceptable Spacings Elsewhere Than At Wiring Terminals

Potential Involved volts	Through Air in.	(mm)	Over Surface in.	(mm)
0-50	1/16	(1.6)	1/16	(1.6)
51-300	1/8	(3.2)	1/4	(6.4)
301-600	1/4	(6.4)	3/8	(9.5)
601-1000	3/8	(9.5)	1/2	(12.7)

13. WEATHERPROOF COMPARTMENTS

13.1 A sheet steel enclosure of a weatherproof compartment shall have a thickness of not less than 0.053 in. (1.35 mm) if measured uncoated, or 0.056 in. (1.42 mm) if measured with a zinc coating.

13.2 A hole for rigid metal conduit in the enclosure of a weatherproof compartment shall be threaded, unless it is located wholly below the lowest live part in the compartment (insulated wire leads are not considered to be live parts).

13.3 A threaded hole for rigid metal conduit shall be reinforced to provide metal not less than 1/4 in. (6.4 mm) thick, and shall be tapered unless a conduit end stop is provided.

13.4 A bushed hole for open wiring shall not be located in the top or back of the enclosure unless a hood fitting is provided; if a bushed hole is located in a side above live parts, it shall provide for the wire leaving the enclosure in a downward direction.

13.5 There shall be provision for drainage of a compartment if knockouts or unthreaded conduit openings are provided.

14. CORROSION RESISTANCE

14.1 Sheet steel having a thickness of 0.120 in. (3.05 mm) or more that may be exposed to the weather shall be made corrosion-resistant by one of the following coatings:

(1) Hot-dipped mill-galvanized sheet steel conforming with the coating designation G60 or A60 in Table I of ASTM A525-76, with not less than 40% of the zinc on any side, based on the minimum single spot-test requirement in this ASTM specification. An approved test for measuring the weight of zinc coating is the test method of ASTM A90-69.

(2) A zinc coating, other than that provided on hot-dipped mill-galvanized sheet steel, uniformly applied to an average thickness of not less than 0.00041 in. (0.010 mm) on each surface with a minimum thickness of 0.00034 in. (0.009 mm). An approved test for measuring the thickness of the coating is the Metallic Coating Thickness Test in Volume II.

(3) Two coats of an organic finish of the epoxy or alkyd-resin type or other outdoor paint on both surfaces after forming. The acceptability of the paint is to be determined by consideration of its composition or by corrosion tests if these are considered necessary.

(4) Any one of the means specified in Paragraph 14.2.

14.2 Sheet steel having a thickness of less than 0.120 in. (3.05 mm) which may be exposed to the weather shall be made corrosion resistant by one of the following coatings:

(1) Hot-dipped mill-galvanized sheet steel conforming with the coating designation G90 in Table I of ASTM A525-76, with not less than 40% of the zinc on any side, based on the minimum single spot-test requirement in this ASTM Specification. An approved test for measuring the weight of zinc coating is the test method of ASTM A90-69.

(2) A zinc coating, other than that provided on hot-dipped mill-galvanized sheet steel, uniformly applied to an average thickness of not less than 0.00061 in. (0.015 mm) on each surface with a minimum thickness of 0.00054 in. (0.014 mm). An approved test for measuring the thickness of the coating is the Metallic Coating Thickness Test in Volume II. An annealed coating shall also comply with Paragraphs 14.4 and 14.5.

(3) A cadmium coating not less than 0.0010 in. (0.025 mm) thick on both surfaces. An approved test for measuring the thickness of the coating is the Metallic Coating Thickness Test in Volume II.

(4) A zinc coating conforming with Item 1 or 2 of Paragraph 14.1 with one coat of outdoor paint as specified in Item 3 of Paragraph 14.1.

(5) A cadmium coating not less than 0.00075 in. (0.019 mm) thick on both surfaces with one coat of outdoor paint on both surfaces, or not less than 0.00051 in. (0.013 mm) thick on both surfaces with two coats of outdoor paint on both surfaces. An approved test for measuring the thickness of the cadmium coating is the Metallic Coating Thickness Test in Volume II, and the paint shall be as specified in Item 3 of Paragraph 14.1.

14.3 With reference to Paragraphs 14.1 and 14.2, other finishes, including paints, special metallic finishes and combinations of the two may be accepted when comparative tests with galvanized sheet steel (without annealing, wiping, or other surface treatment) conforming with Item 1 of Paragraph 14.1 or 14.2 as applicable, indicate they provide equivalent protection. Among the factors taken into consideration when judging such coating systems are exposure to salt spray, moist hydrogen sulfide-air mixtures, ultraviolet light and water.

14.4 An annealed coating on sheet steel that is bent or similarly formed or extruded or rolled at edge of holes after annealing shall additionally be painted in the bent or formed area if the bending or forming process damages the zinc coating.

14.5 If flaking or cracking of the zinc coating at the outside radius of the bent or formed section is visible at 25 X magnification, the zinc coating is considered damaged. Simple sheared or cut edges and punched holes are not required to be additionally protected.

14.6 Iron or steel serving as a necessary part of the product but not exposed to the weather shall be plated, painted, or enameled for protection against corrosion.

15. EDGES

15.1 Edges, projections, and corners of photovoltaic modules and panels shall be such as to reduce the risk of cuts to personnel. Compliance is to be determined as described in the Standard, Determination of Sharpness of Edges on Equipment, UL 1439.

16. ACCESSIBILITY

16.1 No accessible part per paragraph 16.2 of a photovoltaic module or panel shall involve a risk of electric shock per paragraph 16.3.

Exception: A part that becomes deenergized when it becomes accessible.

16.2 A part is considered accessible if, in the fully assembled module or panel (that is, with all covers held by screws, etc. in place) it can be touched by the probe shown in Figure 16-1.

Exception No. 1: A cover that may be removed without the use of a tool is not considered a cover for purposes of this requirement.

Exception No. 2: A cover that may be removed for purpose other than access to the live parts it protects (e.g., a cover over stored tools and live terminals) is not considered a cover for purposes of these requirements.

16.3 A part is considered to involve a risk of electric shock if (1) the open circuit voltage between that part and any other accessible part of the module or panel, or any other part in the array (including ground) in which the module or panel is likely to be used, is greater than 30 volts dc, and (2) the current through a 500 ohm (or greater) resistor connected between the points in question is greater than 30 milliamperes. [The term "or greater" was included because under certain circumstances a resistor larger than 500 ohms will cause a larger current flow than a 500 ohm resistor. An example is an oscillator designed to function with, for example, 600 ohms across its output. Although this circumstance is not anticipated with photovoltaic modules and panels, it has not yet been tested.]

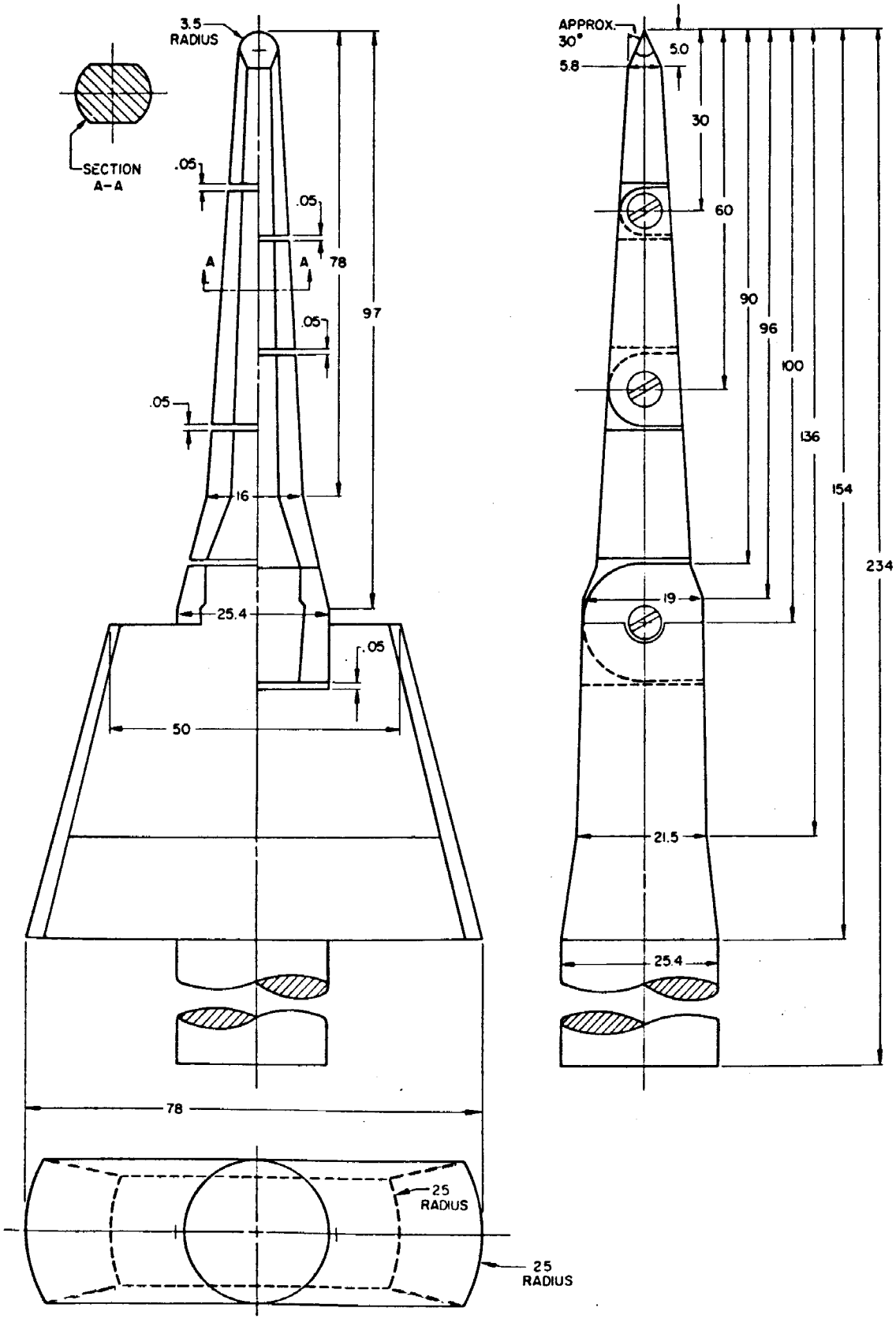

Figure 16-1. Probe for Determining Accessibility of Live Parts (all dimensions in millimeters)

17. FIRE RESISTANCE

17.1 A photovoltaic module or panel in combination with a prescribed roof, and a photovoltaic module intended for mounting as the roof covering itself, shall meet the requirements of Class A, B, or C as defined in UL-790. For the combination situation this rating need not be coincident with the basic roof covering material rating. An appropriate test for determining the degree of fire resistance is UL-790 modified by Section 14 of Volume II.

Exception: A module or panel intended only for mounting in an array field or for mounting above, upon, or integral with the roof structure of a separate, detached building that serves only to support and house components of a photovoltaic system, need not achieve a rating of Class A, B, or C.

18. ENCAPSULANT

18.1 Encapsulant material shall not present a risk of injury to persons because of broken pieces or shards that could fall from their mounting or be picked up and driven by wind. The module assembly when exposed to impact shall:

(1) Be nonshattering or, if glass, a tempered type that complies with the performance specifications in the Performance Specifications and Methods of Test for Safety Glazing Material Used in Buildings, ANSI Z97.1-1975; or

(2) Comply with Safety Standard for Architectural Glazing Materials, CPSC, Standard Part 1201, or

(3) Comply with the requirements of the Impact Test, Volume II.

Exceptions:

(1) Thin-film flexible glazing material having thicknesses of 0.01 in. or less need not comply with this requirement.

(2) Encapsulant which is protected with screen wire or other similar means with openings that will not pass a 1/2 in. (12.7 mm)- dia hemispherically tipped probe applied with a force of 1 lb (4.4 N).

19. HEATING

19.1 When a photovoltaic module or panel is at thermal equilibrium in its intended application referenced to 100 mW/cm^2, AM 1.5, 40°C air temperature, still air, maximum load or open circuit (whichever results in maximum temperature) and also hot-spot heating associated with operation at short circuit; no part shall attain a temperature that would result in one or more of the following conditions:

(1) The likelihood of ignition of materials or components.

(2) The temperature limits of surfaces, materials, or components, as described in Table 19-1, being exceeded.

(3) Creeping, distortion, sagging, charring or similar damage to any part of the product, if such damage or deterioration may impair the performance of the product under the requirements of this Standard.

(4) Imposition of a temperature on an adjacent structural member that would impair that member.

Table 19-1. Maximum Temperature

Part, Material, or Component	Temperature C	(F)
Insulating materials		
Polymeric	(a)	(a)
Varnished cloth	85	185
Fiber	90	194
Wood and similar material	90	194
Laminated phenolic composition	125	257
Molded phenolic composition	150	302
Any sealing compound	(b)	(b)
Field wiring terminals[c]	60	140
Field wiring compartment which wires may contact[c]	60	140
Metals[d]		
Galvanized steel[e]	292	557
Aluminum alloys		
1100	208	407
3003	264	507
2014, 2017, 2024, 5052	319	607

Table 19-1. Maximum Temperature (Cont.)

Part, Material, or Component	Temperature C	(F)
Insulated conductors		
Temperature Rating		
75°C	75	167
80°C	80	176
90°C	90	194
105°C	105	221
200°C	200	392
250°C	250	482
Flexible cord - Types SO, ST, SJO, SJT	60	140
Other types of insulated wires	(f)	(f)
Surfaces(g)		

Notes for Table 19-1:

(a) Polymeric material may be acceptable for the application when judged with respect to temperature.

(b) The maximum sealing compound temperature, when corrected to 40°C (104°F) ambient temperature, is 15°C (59°F) less than the softening point of the compound as determined by the Standard Test Method for Softening Point by Ring and Ball Apparatus, ASTM E28-1967 (1977).

(c) The temperatures observed on the terminals and at points within a terminal box may exceed the value specified if a marking is provided as described in Volume II. The terminals and points shall not attain a temperature higher than 90°C (194°F).

(d) Higher temperatures than specified can be attained if it can be determined that the higher temperatures will not cause a risk of shock or fire or conditions not in compliance with Paragraph 19.1.

(e) The specified maximum temperature applies if the galvanizing is required as a protective coating or the reflectivity of the surface is utilized to reduce the temperatures on other materials.

(f) For standard insulated conductors other than those mentioned, reference should be made to the National Electrical Code.

(g) For hot-spot heating only under short-circuit conditions, 20°C (36°F) above temperatures achieved during maximum load or open-circuit conditions.

20. Dielectric Voltage Withstand

20.1 The insulation and spacings between live parts and accessible conductive parts and between live parts and exposed surfaces of insulating parts shall be designed and constructed to withstand the application of a test voltage equal to 2 x system voltage + 1000 for 15 minutes, where the system voltage is the maximum acceptable use voltage to ground under open circuit system conditions, cell temperature of $0^{o}C$, and an irradiance of 100 mW/cm^2.